PIAGGIO & C. s.p.a.

MOTO GUZZI

SPARE PARTS CATALOGUE

Quota 1000 1992-1997

Chassis prefix: ZGUKB

Engine prefix:

QUOTA **GU038**

Index

Products....3
Part reference....4
FRAME....10
Drawing 33.01 - Rear shock absorber....10
Drawing 33.02 - Fairing....11
Drawing 33.03 - Lateral stand....14
Drawing 33.04 - Bevel gear....15
Drawing 33.05 - Dashboard....17
Drawing 33.06 - Headlight-Horn....18
Drawing 33.07 - Taillight....19
Drawing 33.08 - Front fork....20
Drawing 33.09 - Swing arm....22
Drawing 33.10 - Electrical system....23
Drawing 33.11 - Handlebar - Controls....25
Drawing 33.12 - Front/rear mudguards....27
Drawing 33.13 - Front master cilinder....29
Drawing 33.14 - Rear master cylinder....31
Drawing 33.15 - Frame reinforcement....33
Drawing 33.16 - Front wheel....34
Drawing 33.17 - Rear wheel....35
Drawing 33.18 - Fuel tank-seat....37
Drawing 33.19 - Frame....39
Drawing 33.20 - Rear frame....41
Drawing 33.23 - Fuel supply....43
Drawing 33.26 - Electronic control unit....44
Drawing 33.31 - Exhaust unit....46
Drawing 33.33 - Gear lever....47
ENGINE....48
Drawing 34.21 - Drive shaft....48
Drawing 34.22 - Driven shaft....50
Drawing 34.24 - Gear box....52
Drawing 34.25 - Crankcase....54
Drawing 34.27 - Throttle body....56
Drawing 34.28 - Timing system....58
Drawing 34.29 - Clutch....59
Drawing 34.30 - Generator....60
Drawing 34.32 - Starter motor....61
Drawing 34.34 - Oil pump....62
Drawing 34.35 - Transmission cage....64
Drawing 34.36 - Heads....66

Products

Code	Validity
no products	

Code	Drawing Nr.	Pos.
GU00823931070	33.02	4
GU00823942070	34.34	34
GU00823942070	34.35	28
GU00823944050	33.18	9
GU00823946060	33.10	25
GU00823946060	33.26	11
GU00823950050	33.14	29
GU01007200	34.34	26
GU01023600	34.36	37
GU01153600	34.34	22
GU01336800	33.17	16
GU03158200	34.34	14
GU10032700	34.36	32
GU10034100	34.36	29
GU10158701	34.34	15
GU10528900	33.04	9
GU10528900	34.25	29
GU10528900	34.35	26
GU12001200	34.25	14
GU12003702	34.25	32
GU12003900	34.25	2
GU12006400	33.23	17
GU12006400	34.34	9
GU12006500	34.27	17
GU12007600	34.34	27
GU12011400	34.25	40
GU12011401	34.25	40
GU12011402	34.25	40
GU12011403	34.25	40
GU12011700	34.25	41
GU12011800	34.25	39
GU12012200	34.25	11
GU12018900	34.25	6
GU12021700	34.21	13
GU12021800	34.21	12
GU12022600	33.04	6
GU12022600	34.35	23
GU12022600	34.36	15
GU12031800	34.36	33
GU12038100	34.36	14
GU12054000	34.28	4
GU12065400	34.21	19
GU12067701	34.21	21
GU12082300	34.29	4
GU12082800	34.29	5
GU12082901	34.29	2
GU12087001	34.29	9
GU12150700	34.34	18
GU12150900	34.34	16
GU12154200	34.34	25
GU12154200	34.35	33
GU12157800	34.34	32
GU12159000	34.34	19
GU12207200	34.35	18
GU12207700	34.35	19
GU12211700	34.24	12
GU12327700	33.09	16
GU12351100	33.04	11
GU12355202	33.04	18
GU12355203	33.04	18
GU12356300	33.04	30
GU12433000	33.14	34
GU12434001	33.19	33
GU12547200	33.09	5
GU12548401	34.27	19
GU12616101	33.16	16
GU12616101	33.17	5

Code	Drawing Nr.	Pos.
GU12616102	33.16	16
GU12616102	33.17	5
GU12616103	33.16	16
GU12616103	33.17	5
GU12763300	33.05	13
GU13021900	34.36	17
GU13036801	34.36	3
GU13037000	34.36	10
GU13037200	34.36	8
GU13037400	34.36	11
GU13037600	34.36	12
GU13084100	34.29	1
GU13148300	34.34	4
GU13211500	34.24	10
GU14003240	34.25	25
GU14003501	34.25	27
GU14003600	34.25	24
GU14003800	34.34	39
GU14011900	34.25	10
GU14011901	34.25	10
GU14018400	34.36	24
GU14020865	34.21	10
GU14022065	34.36	20
GU14023560	34.36	36
GU14023760	34.36	38
GU14030201	34.36	25
GU14030401	34.36	26
GU14034865	34.36	22
GU14036860	34.36	4
GU14037300	34.36	9
GU14038000	34.36	13
GU14060760	34.21	5
GU14061060	34.21	7
GU14072001	34.28	10
GU14085700	34.29	6
GU14085900	34.29	7
GU14086000	34.29	8
GU14086100	34.29	10
GU14090202	34.29	12
GU14090400	34.29	14
GU14152200	34.34	10
GU14153000	34.34	13
GU14158800	34.34	21
GU14201110	34.35	10
GU14204955	34.35	27
GU14210513	34.24	14
GU14210702	34.24	5
GU14211110	34.24	8
GU14211201	34.24	9
GU14211600	34.24	11
GU14212013	34.24	17
GU14212210	34.24	21
GU14213001	34.22	12
GU14213612	34.22	1
GU14213803	34.35	4
GU14214210	34.22	18
GU14214510	34.22	13
GU14214810	34.22	11
GU14215110	34.22	5
GU14215213	34.22	17
GU14215400	34.22	4
GU14217300	34.22	16
GU14217410	34.22	2
GU14217901	33.13	31
GU14217901	34.27	25
GU14217901	34.35	20
GU14217901	34.35	6

Code	Drawing Nr.	Pos.
GU14218011	34.22	10
GU14218401	34.24	7
GU14219310	34.22	14
GU14219401	34.24	13
GU14230501	34.22	26
GU14230711	34.22	19
GU14231012	34.22	8
GU14231201	34.22	27
GU14231510	34.24	22
GU14232400	34.22	25
GU14232512	34.22	9
GU14234300	34.22	23
GU14234405	34.22	20
GU14234600	34.22	24
GU14235500	34.22	21
GU14237800	34.35	14
GU14335203	33.17	18
GU14335303	33.17	19
GU14423800	33.03	9
GU14429800	33.19	18
GU14432900	33.19	11
GU14433200	33.19	12
GU14433400	34.28	8
GU14516700	33.08	40
GU14517000	33.08	41
GU14547001	33.09	6
GU14547800	33.09	4
GU14609650	33.10	12
GU14609650	33.11	31
GU14615901	33.04	21
GU14615901	33.04	31
GU14615901	33.04	4
GU14615901	33.16	8
GU14615901	33.17	13
GU14615901	33.19	38
GU14615901	33.20	17
GU14615901	33.20	4
GU14615901	33.31	8
GU14615901	34.21	22
GU14615901	34.27	7
GU14634051	33.17	14
GU14634400	33.17	24
GU14657050	33.14	17
GU14705350	33.10	20
GU14717600	33.26	30
GU14762510	33.05	22
GU14766110	33.05	19
GU17034050	34.36	28
GU17045860	34.28	2
GU17067900	34.21	23
GU17335950	33.17	20
GU17350250	33.04	1
GU17350400	33.04	23
GU17350700	33.04	24
GU17351400	33.04	28
GU17354650	33.04	29
GU17355400	33.04	25
GU17355402	33.04	25
GU17355404	33.04	25
GU17355406	33.04	25
GU17355408	33.04	25
GU17355410	33.04	25
GU17355412	33.04	25
GU17633550	33.17	15
GU17634150	33.17	23
GU17661052	33.14	31
GU17667651	33.14	6

Code	Drawing Nr.	Pos.
GU17718350	33.26	31
GU17750520	33.10	11
GU17762422	33.05	2
GU17768360	33.05	5
GU17768750	34.34	8
GU17999550	34.25	43
GU18001150	34.25	20
GU18001650	34.25	21
GU18060601	34.21	4
GU18060950	34.21	6
GU18200802	34.35	11
GU18211050	34.24	15
GU18211051	34.24	15
GU18211052	34.24	15
GU18211054	34.24	15
GU18352400	33.04	15
GU18355100	33.04	17
GU18548000	33.09	9
GU19007700	34.25	23
GU19149800	33.13	20
GU19157800	33.14	30
GU19258220	33.33	3
GU19355320	33.04	19
GU19355321	33.04	19
GU19355322	33.04	19
GU19355323	33.04	19
GU19355324	33.04	19
GU19355325	33.04	19
GU19355326	33.04	19
GU19355327	33.04	19
GU19355328	33.04	19
GU19355329	33.04	19
GU19357660	33.04	20
GU19705900	33.10	21
GU19707100	33.10	32
GU19748000	33.10	14
GU23922210	33.02	3
GU25656100	33.13	6
GU25656100	33.14	19
GU25656102	34.34	23
GU27061385	34.21	9
GU27117615	33.11	20
GU27251015	33.14	2
GU27251015	33.33	13
GU27440210	33.19	34
GU27441110	33.19	40
GU27441310	33.19	35
GU27443210	33.19	36
GU27530503	33.08	5
GU27530504	33.08	6
GU27530505	33.08	7
GU27530506	33.08	8
GU27530510	33.08	17
GU27530511	33.08	18
GU27530520	33.08	33
GU27530521	33.08	32
GU27601015	33.11	5
GU27601215	33.11	6
GU27601815	33.11	26
GU27603016	33.11	10
GU27603400	33.11	3
GU27603516	33.11	15
GU27603715	33.11	19
GU27603815	33.11	16
GU27604415	33.11	17
GU27604515	33.11	25
GU27611710	33.16	3

Code	Drawing Nr.	Pos.
GU27611710	33.17	4
GU27659415	33.11	27
GU27663815	33.11	8
GU27738015	33.11	9
GU28058060	34.28	14
GU28061260	34.21	8
GU28150560	34.34	30
GU28153960	34.34	33
GU28157050	34.34	37
GU28157950	34.34	36
GU28217350	34.22	29
GU28236260	33.33	1
GU28238261	33.33	2
GU28258160	33.33	6
GU28350345	33.04	2
GU28576590	33.02	26
GU28633300	33.17	11
GU28742560	33.10	5
GU28742560	33.26	15
GU28743760	33.06	5
GU28743761	33.06	6
GU28745761	33.05	21
GU28749778	33.10	22
GU28760410	33.05	4
GU29000735	34.25	1
GU29001453	34.25	15
GU29018361	34.25	36
GU29053350	34.28	3
GU29054460	34.28	7
GU29064161	34.21	18
GU29067060	34.21	20
GU29084450	34.29	3
GU29093070	33.11	11
GU29093071	33.11	11
GU29105460	33.18	11
GU29105860	33.23	13
GU29106061	33.23	11
GU29107261	33.23	1
GU29107360	33.23	3
GU29109160	33.23	9
GU29109161	33.23	16
GU29112760	33.23	18
GU29113860	33.23	12
GU29217960	33.13	33
GU29217960	33.26	34
GU29217960	34.30	7
GU29326300	33.09	15
GU29577860	33.02	11
GU29577860	33.02	9
GU29577860	33.12	27
GU29711460	34.30	5
GU29711960	34.30	11
GU29717060	33.26	21
GU29721660	33.26	16
GU29722760	33.26	20
GU29724460	33.26	7
GU29726461	34.30	14
GU29727061	33.26	10
GU29727860	33.05	14
GU29728960	33.12	18
GU29729762	33.26	35
GU29764960	33.05	15
GU29767260	33.05	3
GU29767860	33.05	16
GU29999000	34.25	44
GU30000770	34.25	1
GU30001461	34.25	15

Code	Drawing Nr.	Pos.
GU30003260	34.25	25
GU30003560	34.25	27
GU30003770	34.25	28
GU30003800	34.34	39
GU30004910	34.25	34
GU30022110	34.36	1
GU30022160	34.36	1
GU30022210	34.36	2
GU30022260	34.36	2
GU30023630	34.36	37
GU30027931	33.26	24
GU30036010	34.36	6
GU30036110	34.36	5
GU30057810	34.28	15
GU30060085	34.21	1
GU30060110	34.21	1
GU30060111	34.21	2
GU30060185	34.21	2
GU30060410	34.21	3
GU30061500	34.21	14
GU30062000	34.21	17
GU30062001	34.21	17
GU30062002	34.21	17
GU30062003	34.21	17
GU30062260	34.21	15
GU30081810	34.24	3
GU301002301	33.18	1
GU30100231	33.18	1
GU30100232	33.18	1
GU30100233	33.18	1
GU30101700	33.18	4
GU30101730	33.18	13
GU30101830	33.18	12
GU30102300	33.18	3
GU30103030	33.18	10
GU30103230	33.18	16
GU30103730	33.18	6
GU30104100	33.18	2
GU30104630	33.18	7
GU30106130	33.23	7
GU30106530	33.23	2
GU30107930	33.23	22
GU30108030	33.23	24
GU30108230	33.23	15
GU30108731	33.23	21
GU30109230	33.23	23
GU30109330	33.31	4
GU30109331	33.23	10
GU30112630	34.27	1
GU30112930	34.27	34
GU30113430	34.27	28
GU30113600	34.27	27
GU30113730	34.27	26
GU30113930	34.27	2
GU30114330	34.27	18
GU30114430	34.27	8
GU30115030	34.27	11
GU30115031	34.27	12
GU30115032	34.27	11
GU30115033	34.27	12
GU30115730	34.27	3
GU30116930	34.27	20
GU30116931	34.27	20
GU30117530	33.11	12
GU30120930	33.31	1
GU30120931	33.31	2
GU30121030	33.31	7

Code	Drawing Nr.	Pos.
GU30121230	33.31	6
GU30121930	33.31	22
GU30123030	33.31	16
GU30123400	33.31	11
GU30123830	33.31	12
GU30123930	33.31	10
GU30126930	33.31	17
GU30132830	33.11	13
GU30146400	34.34	1
GU30147700	34.34	2
GU30153000	34.34	13
GU30157430	34.34	31
GU30200200	34.35	1
GU30200231	34.35	1
GU30200860	34.35	11
GU30211160	34.24	8
GU30211260	34.24	9
GU30211560	34.24	10
GU30211660	34.24	11
GU30250830	33.33	12
GU30250832	33.33	12
GU30252030	33.19	13
GU30252930	33.14	4
GU30252930	33.33	15
GU30256930	33.33	10
GU30257730	33.33	7
GU30328031	33.09	17
GU30350285	33.04	1
GU30350360	33.04	2
GU30356760	33.04	13
GU30400130	33.19	1
GU30407430	34.30	15
GU30414330	33.12	15
GU30420330	33.19	2
GU30422130	33.19	3
GU30424230	33.19	30
GU30425030	34.35	39
GU30425031	34.35	39
GU30425330	34.27	23
GU30425630	33.20	1
GU30427030	33.19	29
GU30429530	33.19	20
GU30429531	33.03	10
GU30429630	33.19	23
GU30430330	33.19	10
GU30432030001	33.03	12
GU30432130	33.03	1
GU30432700	33.03	4
GU30433000	33.03	8
GU30433200	33.03	3
GU30433430	33.03	2
GU30433530	33.19	19
GU30433800	33.03	6
GU30434000	33.03	7
GU30434001	33.03	5
GU304344301	33.12	1
GU30434431	33.12	1
GU30434432	33.12	1
GU30434433	33.12	1
GU30436630	33.12	2
GU30437030	33.12	5
GU30437430	33.12	19
GU30438530	33.12	7
GU30438930	33.12	10
GU30439330	33.12	11
GU30440630	33.20	25
GU30443530	33.19	26

Code	Drawing Nr.	Pos.
GU30444630	33.20	14
GU30444631	33.20	14
GU30444730	33.20	15
GU30444731	33.20	15
GU30446030	33.19	27
GU30460530	33.18	26
GU30464330	33.20	2
GU304664301	33.02	21
GU30466431	33.02	21
GU30466432	33.02	21
GU30466433	33.02	21
GU30466530	33.20	9
GU30468230	33.12	25
GU30472630	33.10	26
GU30474630	33.12	31
GU304762301	33.02	22
GU30476231	33.02	22
GU30476232	33.02	22
GU30476233	33.02	22
GU304763301	33.02	23
GU30476331	33.02	23
GU30476332	33.02	23
GU30476333	33.02	23
GU30479630	33.12	17
GU30490230	33.08	42
GU30493130	33.08	10
GU30494030	33.08	15
GU30500230	33.08	4
GU30500630	33.08	1
GU30512830	33.08	16
GU30522530	33.08	35
GU30522630	33.08	29
GU30525330	33.08	21
GU30525331	33.08	20
GU30526630	33.08	34
GU30530502	33.08	26
GU30530508	33.08	13
GU30530510	34.32	2
GU30530511	34.32	3
GU30530512	34.32	8
GU30530515	33.08	22
GU30530520	33.08	28
GU30530521	33.08	30
GU30530530	33.08	31
GU30530531	33.08	24
GU30530532	33.08	25
GU30530534	33.08	23
GU30530538	33.08	37
GU30530539	33.08	36
GU30530540	33.08	38
GU30530541	33.08	11
GU30530542	33.08	12
GU30530544	33.08	3
GU30530546	33.13	12
GU30530547	33.13	11
GU30530548	33.13	26
GU30530549	33.13	25
GU30530551	33.08	14
GU30530553	34.27	36
GU30540230	33.09	1
GU30550231	33.01	1
GU30560430	33.01	9
GU30560730	33.15	3
GU30560830	33.01	13
GU30560831	33.15	5
GU30560930	33.15	6
GU30561030	33.15	1

Code	Drawing Nr.	Pos.
GU30561130	33.15	2
GU30561831	33.01	6
GU30562030	33.01	7
GU30562630	33.01	4
GU30562931	33.01	10
GU30563030	33.01	11
GU305703301	33.02	19
GU30570331	33.02	19
GU30570332	33.02	19
GU30570333	33.02	19
GU305704301	33.02	20
GU30570431	33.02	20
GU30570432	33.02	20
GU30570433	33.02	20
GU305754301	33.02	1
GU30575431	33.02	1
GU30575432	33.02	1
GU30575433	33.02	1
GU30575830	33.02	17
GU30575831	33.02	18
GU305759301	33.02	16
GU30575931	33.02	16
GU30575932	33.02	16
GU30575933	33.02	16
GU30577230	33.02	2
GU30577800	33.02	11
GU30577800	33.02	25
GU30577930	33.05	17
GU30578630	33.06	9
GU305929301	33.11	28
GU30592931	33.11	28
GU30592932	33.11	28
GU30592933	33.11	28
GU30593030	33.11	29
GU305930301	33.11	29
GU30593031	33.11	29
GU30593033	33.11	29
GU30600130	33.11	1
GU30602500	33.11	7
GU30604330	33.11	35
GU30604830	33.11	30
GU30604830	33.13	10
GU30605530	33.11	2
GU30605630	33.13	13
GU30610330	33.16	1
GU30610331	33.16	1
GU30610830	33.16	17
GU30611630	33.16	2
GU30613331	33.16	10
GU30614130	33.16	13
GU30615830	33.16	14
GU30616330	33.16	12
GU30620330	33.16	4
GU30620331	33.16	4
GU30630630	33.17	1
GU30630631	33.17	1
GU30630730	33.17	26
GU30631130	33.17	2
GU30631430	33.17	3
GU30632430	33.17	6
GU30632431	33.17	6
GU30635731	33.17	9
GU30635830	33.14	32
GU30652230	33.13	15
GU30652330	33.13	16
GU30652630	33.14	23
GU30653030	33.14	21

Code	Drawing Nr.	Pos.
GU30654630	33.14	22
GU30654631	33.13	18
GU30655630	33.13	29
GU30657130	33.14	18
GU30657530	33.13	28
GU30658830	33.13	14
GU30659330	33.13	4
GU30660130	33.13	1
GU30660230	33.13	8
GU30661130	33.13	2
GU30661330	33.13	3
GU30665630	33.14	16
GU30667030	33.14	14
GU30667730	33.14	15
GU30668730	33.14	13
GU30675030	33.14	10
GU30675031	33.14	10
GU30677030	33.14	1
GU30677032	33.14	1
GU30704500	33.10	17
GU30704830	33.10	18
GU30707030	33.10	19
GU30714200	34.30	3
GU30714201	34.30	3
GU30716500	33.26	26
GU30717031	33.26	21
GU30717410	33.26	29
GU30723830	33.26	3
GU30724630	33.10	16
GU30725830	33.26	1
GU30728230	33.26	23
GU30729331	33.26	22
GU30729531	33.26	2
GU30730711	34.32	1
GU30732510	33.10	10
GU30735500	33.05	18
GU30736830	33.18	29
GU30740530	33.06	1
GU30740534	33.06	1
GU30741330	33.06	21
GU30743000	33.10	4
GU30747130	33.10	1
GU30747230	33.10	2
GU30747430	33.10	3
GU30747930	33.10	15
GU30748430	33.10	13
GU30758000	33.05	6
GU30758100	33.05	6
GU30758200	33.05	6
GU30758330	33.05	6
GU30761530	33.05	2
GU30765230	33.05	1
GU30766330	33.05	8
GU30769430	33.11	21
GU30769830	33.11	22
GU30782500	33.05	9
GU30783630	33.05	10
GU30900030	33.11	24
GU30917830	33.02	30
GU30922130	33.02	33
GU30922530	33.02	32
GU30923330	33.02	28
GU30923530	33.02	31
GU30926132	33.12	30
GU30943400	33.20	27
GU30944700	33.26	38
GU30945000	33.10	9

Code	Drawing Nr.	Pos.
GU30991030	34.25	45
GU30991031	34.25	45
GU30991530	34.35	41
GU30991531	34.35	41
GU31003766	33.04	33
GU31003766	34.35	40
GU31441260	33.20	23
GU31704560	33.10	17
GU31740960	33.07	1
GU31741760	33.07	2
GU31745860	33.12	21
GU31750630	33.06	14
GU31750630	33.06	15
GU31750630	33.07	12
GU31750630	33.07	9
GU31753730	33.06	18
GU31753730	33.07	14
GU37023505	34.36	36
GU37045006	34.28	1
GU37530506	33.08	27
GU37703805	34.30	2
GU37712306	34.30	9
GU37712405	34.30	1
GU37712405001	34.30	19
GU37909905	33.11	23
GU39474600	33.12	32
GU39615201	33.16	6
GU39741101	33.13	5
GU43083810	34.22	3
GU51609800	33.20	21
GU55234700	34.35	30
GU55235000	34.22	22
GU55235001	34.22	22
GU55235002	34.22	22
GU55235003	34.22	22
GU61013800	33.12	9
GU61013800	33.23	6
GU61013800	33.31	21
GU61013800	34.30	13
GU61108500	33.18	8
GU61270300	33.04	21
GU61270300	33.09	19
GU61270300	34.25	13
GU61270300	34.28	17
GU65663500	33.14	26
GU66440730	33.20	18
GU66441630	33.20	20
GU66441830	33.20	19
GU66443230	33.20	22
GU66466815	33.20	12
GU66468115	33.20	13
GU66530505	33.08	2
GU66654730	33.13	17
GU66656830	33.13	32
GU66659030	33.13	23
GU66659130	33.13	22
GU89000053	33.18	1
GU89000054	33.02	1
GU89000055	33.02	19
GU89000056	33.02	20
GU89000057	33.02	16
GU89000058	33.12	1
GU89000059	33.02	22
GU89000060	33.02	23
GU89000061	33.02	21
GU89000062	33.11	28
GU89000063	33.11	29

Code	Drawing Nr.	Pos.
GU90118152	34.36	31
GU90271020	33.09	14
GU90272047	33.17	8
GU90272062	33.09	2
GU90280006	33.20	26
GU90353016	34.36	7
GU90402026	33.01	12
GU90402840	34.25	19
GU90403040	33.09	7
GU90403547	34.35	2
GU90403548	34.35	31
GU90403850	33.04	10
GU90405367	34.25	42
GU90407085	33.04	27
GU90706094	34.21	11
GU90706094	34.36	21
GU90706115	33.18	17
GU90706140	34.35	12
GU90706141	33.14	3
GU90706141	33.26	19
GU90706141	33.33	14
GU90706170	34.29	11
GU90706178	34.25	35
GU90706178	34.30	8
GU90706203	33.04	7
GU90706203	34.22	31
GU90706203	34.24	6
GU90706203	34.35	24
GU90706203	34.36	16
GU90706219	34.22	28
GU90706235	34.24	4
GU90706313	34.25	37
GU90706409	34.27	10
GU90706490	33.17	17
GU90706584	33.04	16
GU90706584	33.09	13
GU90718370	33.31	5
GU91111511	34.36	27
GU91112128	34.21	16
GU91180605	33.07	8
GU91180607	33.07	5
GU91180607	33.10	29
GU91180608	33.02	15
GU91180817	33.19	39
GU91181006	34.35	37
GU91181018	33.15	4
GU91181023	33.19	4
GU91551062	33.12	24
GU91551082	33.02	14
GU91551085	33.07	4
GU91551085	33.10	28
GU91551166	33.18	18
GU91600450	34.30	10
GU91702355	34.28	13
GU92201070	33.04	26
GU92201417	34.35	13
GU92204217	33.16	5
GU92204220	33.17	7
GU92204230	33.09	3
GU92218424	34.35	7
GU92234717	34.35	8
GU92249217	33.09	8
GU92249225	33.08	39
GU92249227	33.04	14
GU92251022	34.22	7
GU92251030	34.22	30
GU92251030	34.24	20

Code	Drawing Nr.	Pos.
GU92252030	33.01	5
GU92252210	34.34	5
GU92254340	33.04	12
GU92256218	34.35	3
GU92258525	34.24	16
GU92259017	34.22	6
GU92295702	34.22	15
GU92296750	34.24	18
GU92601003	33.26	37
GU92601208	33.14	12
GU92601312	33.19	9
GU92602206	33.12	34
GU92602208	34.25	8
GU92602308	34.34	7
GU92602312	33.19	22
GU92602316	33.16	15
GU92602316	33.17	25
GU92602508	34.29	15
GU92602512	33.06	17
GU92602512	33.07	10
GU92602512	34.30	4
GU92602512	34.35	15
GU92602518	34.28	9
GU92602525	34.28	12
GU92603010	34.36	23
GU92603516	34.30	4
GU92630104	33.11	32
GU92630104	33.26	28
GU92630104	33.26	6
GU92630105	33.12	23
GU92630106	33.02	7
GU92630106	33.07	7
GU92630106	33.12	14
GU92630106	33.18	25
GU92630106	33.33	9
GU92630108	33.19	25
GU92630110	33.19	16
GU92630206	33.02	13
GU92630206	33.11	34
GU92630206	33.13	24
GU92630206	33.14	9
GU92630206	34.30	18
GU92630508	33.16	9
GU92630508	33.19	32
GU92660008	33.20	7
GU92660008	33.31	20
GU92660208	33.31	14
GU92660210	33.01	8
GU92660501	33.10	8
GU92660601	33.10	23
GU92660601	33.12	26
GU92660601	33.26	9
GU92731090	34.21	25
GU92750085	33.04	5
GU92750085	33.31	9
GU92781081	34.25	5
GU93110082	33.18	23
GU93180105	33.09	12
GU93180216	33.12	29
GU93180220	34.35	22
GU93180245	33.04	32
GU93180245	34.35	36
GU93202208	33.19	28
GU93202208	33.31	18
GU93202208	34.27	21
GU93211315	33.26	4
GU93212520	33.31	13

Code	Drawing Nr.	Pos.
GU93221315	33.26	4
GU93222020	33.02	5
GU93222020	34.27	32
GU93231605	33.02	12
GU93231606	33.02	12
GU93304390	33.10	31
GU93305017	33.23	8
GU93305017	34.34	35
GU93305060	33.09	10
GU93305078	33.09	11
GU93305093	34.27	9
GU93450119	33.05	20
GU93450120	33.06	8
GU93450127	33.06	7
GU93450127	33.07	13
GU93450134	33.05	7
GU93450224	33.07	3
GU93450234	33.06	4
GU93601022	34.24	1
GU93601026	34.28	12
GU94321051	34.24	19
GU94321067	34.35	29
GU94321070	33.11	14
GU94321072	34.34	17
GU94321105	33.06	3
GU94321105	34.29	13
GU94322215	33.19	17
GU94322215	34.36	30
GU95000204	33.11	33
GU95000205	33.06	19
GU95000206	33.02	6
GU95000206	33.12	4
GU95000206	33.18	24
GU95000206	33.33	8
GU95000208	33.05	12
GU95000208	33.06	11
GU95000208	33.20	8
GU95000213	33.06	20
GU95000213	33.07	15
GU95000213	33.19	21
GU95001206	33.13	27
GU95001208	33.13	9
GU95004204	33.26	18
GU95004205	33.26	14
GU95004205	34.27	30
GU95004206	33.06	13
GU95004206	33.12	16
GU95004206	33.14	28
GU95004206	33.18	28
GU95004206	34.25	31
GU95004206	34.27	16
GU95004206	34.30	17
GU95004206	34.36	40
GU95004208	33.19	41
GU95004208	34.25	4
GU95004208	34.32	10
GU95004208	34.35	38
GU95004210	33.19	24
GU95021106	33.17	21
GU95021106	33.33	5
GU95021112	33.06	16
GU95021112	33.07	11
GU95028022	34.24	2
GU95028025	34.28	11
GU95100059	33.10	7
GU95100064	33.26	5
GU95100116	34.27	14

Code	Drawing Nr.	Pos.
GU95100118	33.07	6
GU95100118	33.12	13
GU95100119	33.23	20
GU95100123	33.11	36
GU95100141	33.18	22
GU95100142	33.14	8
GU95100223	33.31	15
GU95100250	33.13	21
GU95100251	33.13	21
GU95100256	33.18	19
GU95100523	34.34	20
GU95100601	33.14	33
GU95100709	34.25	33
GU95100837	34.28	11
GU95120032	33.26	36
GU95120065	34.28	6
GU95120065	34.34	29
GU95120065	34.36	35
GU95120085	34.34	6
GU95129100	34.27	5
GU95129180	33.14	25
GU95129180	33.19	15
GU95129180	34.36	18
GU95129240	33.19	7
GU95129260	33.14	5
GU95187006	34.34	12
GU95187008	33.04	22
GU95500222	34.29	17
GU95512081	34.25	9
GU95512081	34.35	9
GU95780271	34.29	16
GU95980214	33.04	8
GU95980214	34.35	25
GU95980610	34.35	34
GU95990028	33.13	7
GU95990028	33.14	20
GU95990037	34.34	24
GU96508042	34.36	19
GU96508045	33.04	3
GU96508066	34.25	3
GU96508075	34.25	7
GU97250617	33.02	24
GU97260425	33.05	11
GU98052325	33.33	4
GU98052350	33.18	21
GU98052390	34.25	26
GU98052435	34.28	16
GU98052440	33.20	5
GU98052445	33.20	6
GU98052470	33.16	7
GU98052475	34.32	9
GU98052555	33.19	14
GU98052565	33.03	11
GU98054116	33.26	32
GU98054210	33.26	33
GU98054216	33.12	33
GU98054312	33.17	22
GU98054316	33.12	12
GU98054316	34.27	24
GU98054316	34.34	11
GU98054316	34.36	34
GU98054320	33.12	3
GU98054320	34.28	5
GU98054320	34.34	28
GU98054416	33.18	20
GU98054416	33.18	27
GU98054420	34.21	24

Code	Drawing Nr.	Pos.
GU98054425	33.04	20
GU98054425	34.25	12
GU98074430	33.14	11
GU98110007	33.31	3
GU98200408	34.27	35
GU98202516	33.10	6
GU98202516	33.26	13
GU98230510	33.18	14
GU98230515	33.02	10
GU98230612	33.12	28
GU98230612	33.18	15
GU98230612	33.31	23
GU98230615	34.35	21
GU98230616	33.02	27
GU98230616	33.10	27
GU98230616	33.12	6
GU98230616	33.26	8
GU98230619	33.02	10
GU98230622	33.02	8
GU98230825	33.16	11
GU98230825	33.17	10
GU98230840	33.31	19
GU98250512	33.18	5
GU98250516	33.12	22
GU98250820	34.25	38
GU98250850	33.19	31
GU98290408	33.20	24
GU98310630	34.25	22
GU98316010	34.27	13
GU98326014	33.10	24
GU98610110	33.26	25
GU98610245	34.27	4
GU98610330	33.14	7
GU98610399	34.30	16
GU98610435	33.09	18
GU98610440	33.13	19
GU98610530	33.19	6
GU98610550	33.19	5
GU98612216	33.13	34
GU98612312	33.23	19
GU98612316	33.13	30
GU98612320	33.12	8
GU98612320	33.23	14
GU98612425	33.20	3
GU98613625	33.19	8
GU98620130	33.26	27
GU98620235	34.27	31
GU98620240	33.06	2
GU98620260	34.27	29
GU98620265	34.30	6
GU98620335	33.08	19
GU98620335	34.25	17
GU98620335	34.35	17
GU98620360	34.25	30
GU98620440	34.35	32
GU98620550	33.14	24
GU98620555	33.01	3
GU98620575	33.01	2
GU98622210	33.26	17
GU98622214	33.12	20
GU98622312	33.23	5
GU98622314	33.14	27
GU98622314	34.30	12
GU98622316	33.06	12
GU98622316	34.35	5
GU98622320	34.27	33
GU98622325	33.33	11

Code	Drawing Nr.	Pos.
GU98622325	34.25	16
GU98622325	34.27	15
GU98622325	34.35	16
GU98622325	34.36	39
GU98622416	33.06	10
GU98622430	33.17	12
GU98622430	33.20	16
GU98622430	34.27	6
GU98622430	34.34	3
GU98622435	33.08	9
GU98622435	34.27	22
GU98800445	33.20	11
GU98820440	33.20	10
GU98820445	33.19	37
GU98822325	34.35	35
GU99210311	33.02	29

Assembly	FRAME
Code	33.01
Description	Rear shock absorber
Revision	1

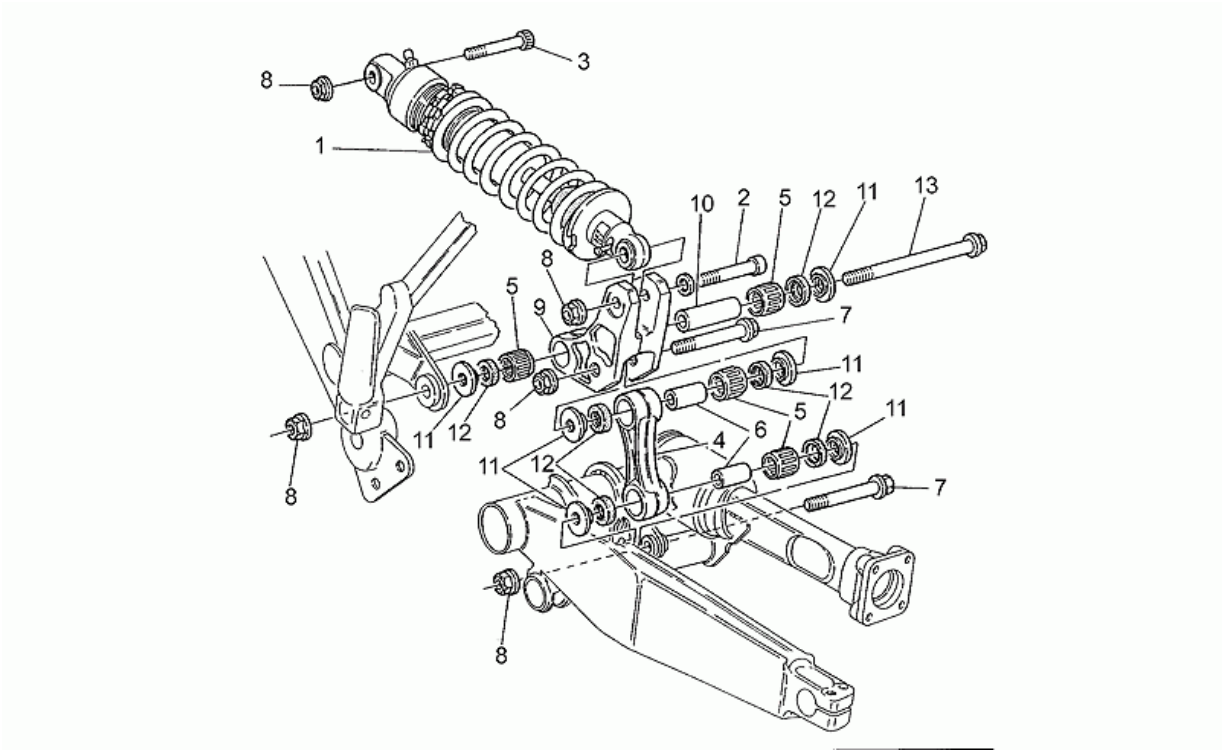

Pos.	Code	Description	Q.ty	Variants
1	GU30550231	Rear shock absorber bitubo	1	
2	GU98620575	Screw	1	
3	GU98620555	Screw	1	
4	GU30562630	Single conrod comp.	1	
5	GU92252030	Roller bearing	4	
6	GU30561831	Bush	2	
7	GU30562030	Rod pin	2	
8	GU92660210	Nut	5	
9	GU30560430	Rocker arm cpl.	1	
10	GU30562931	Bush	1	
11	GU30563030	Spacer	6	
12	GU90402026	Gasket ring	6	
13	GU30560830	Pin	1	

Assembly	FRAME
Code	33.02
Description	Fairing
Revision	1

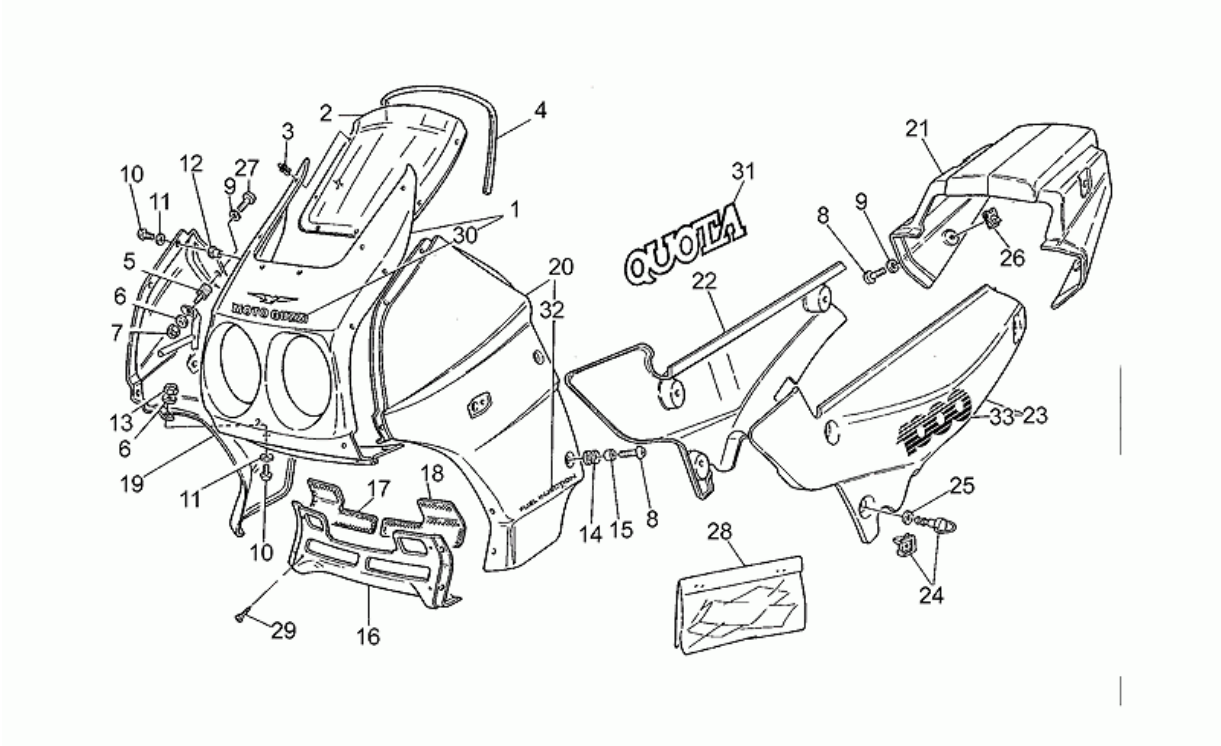

Pos.	Code	Description	Q.ty	Variants
1	GU305754301	Windshield	1	**Color:**Blank[gr]
1	GU30575431	Windshield	1	**Color:**Metallized blue 227[m.b]
1	GU30575432	Windshield	1	**Color:**Amaranth metallized 151[m.a]
1	GU30575433	Windshield	1	**Color:**Red 107[r.]
1	GU89000054	Windshield	1	**Color:** Black 532[b.] **Technical Specifications:**See spare parts comm.n.010 of 1997[01097N]
2	GU30577230	Windscreen	1	
3	GU23922210	Pin	6	
4	GU00823931070	Gasket	1	
5	GU93222020	Silent-block	2	
6	GU95000206	Washer	4	
7	GU92630106	Nut M6x1	2	
8	GU98230622	Screw	6	
9	GU29577860	Washer	4	
10	GU98230515	Screw	12	
10	GU98230619	Hex socket screw M6x18	12	
11	GU29577860	Washer	12	
11	GU30577800	Nylon washer 5,5X12X1	12	
12	GU93231605	Antivibration bush	12	
12	GU93231606	Antivibration bush M6	12	
13	GU92630206	Nut M6x1	2	
14	GU91551082	Rubber spacer	4	
15	GU91180608	Spacer	4	
16	GU305759301	Grille, blank	1	**Color:**Blank[gr]
16	GU30575931	Grid	1	**Color:**Metallized blue 227[m.b]
16	GU30575932	Grid	1	**Color:**Amaranth metallized 151[m.a]
16	GU30575933	Grid	1	**Color:**Red 107[r.]
16	GU89000057	Grid	1	**Color:** Black 532[b.]

Assembly	FRAME
Code	33.02
Description	Fairing
Revision	1

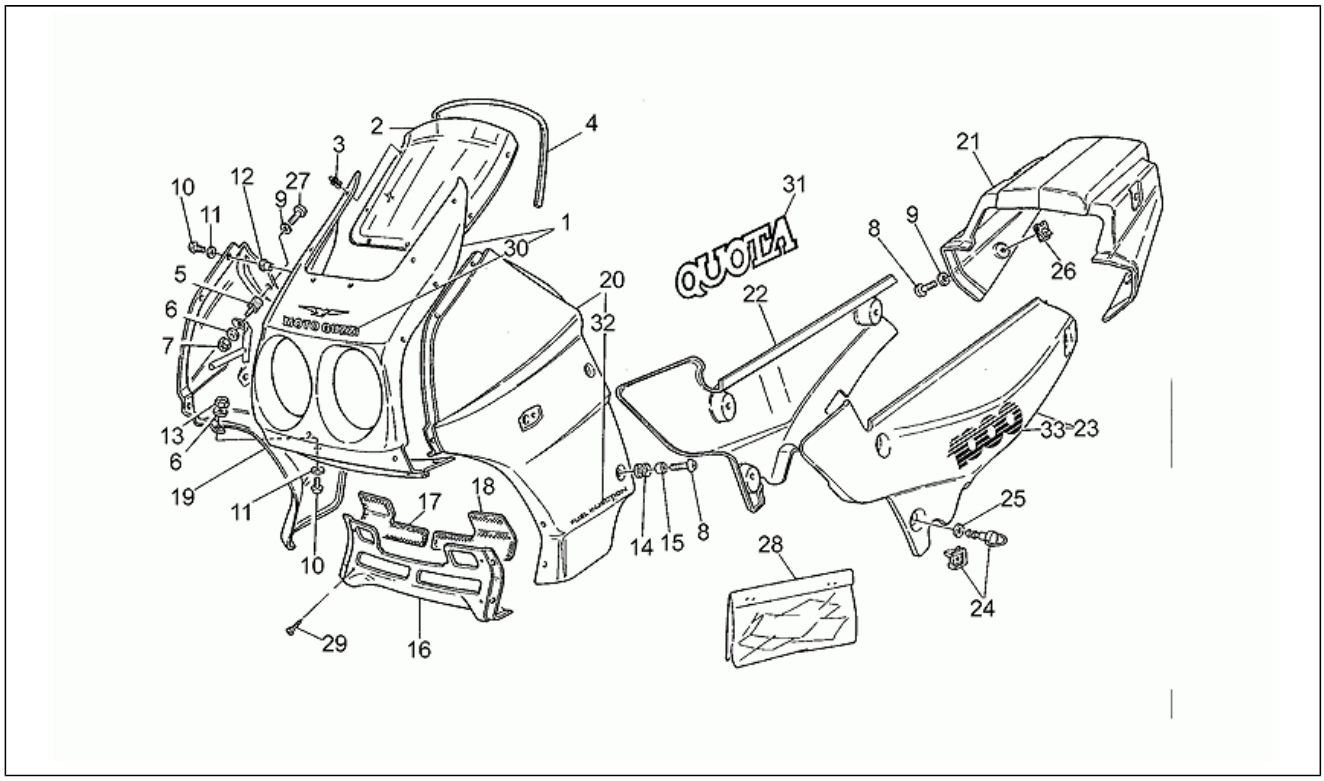

Pos.	Code	Description	Q.ty	Variants
				Technical Specifications: See spare parts comm.n.010 of 1997[01097N]
17	GU30575830	RH side panel guard	1	
18	GU30575831	LH side panel guard	1	
19	GU305703301	RH front fairing, blank	1	**Color:**Blank[gr]
19	GU30570331	RH front fairing	1	**Color:**Metallized blue 227[m.b]
19	GU30570332	RH front fairing	1	**Color:**Amaranth metallized 151[m.a]
19	GU30570333	RH front fairing	1	**Color:**Red 107[r.]
19	GU89000055	RH front fairing	1	**Color:** Black 532[b.] **Technical Specifications:**See spare parts comm.n.010 of 1997[01097N]
20	GU305704301	LH front fairing, blank	1	**Color:**Blank[gr]
20	GU30570431	LH front fairing	1	**Color:**Metallized blue 227[m.b]
20	GU30570432	LH front fairing	1	**Color:**Amaranth metallized 151[m.a]
20	GU30570433	LH front fairing	1	**Color:**Red 107[r.]
20	GU89000056	LH front fairing	1	**Color:** Black 532[b.] **Technical Specifications:**See spare parts comm.n.010 of 1997[01097N]
21	GU304664301	Rear fairing, blank	1	**Color:**Blank[gr]
21	GU30466431	Rear fairing	1	**Color:**Metallized blue 227[m.b]
21	GU30466432	Rear fairing	1	**Color:**Amaranth metallized 151[m.a]
21	GU30466433	Rear fairing	1	**Color:**Red 107[r.]
21	GU89000061	Rear fairing	1	**Color:** Black 532[b.] **Technical Specifications:**See spare parts comm.n.010 of 1997[01097N]
22	GU304762301	RH side panel	1	**Color:**Blank[gr]
22	GU30476231	RH side panel	1	**Color:**Metallized blue 227[m.b]
22	GU30476232	RH side panel	1	**Color:**Amaranth metallized 151[m.a]
22	GU30476233	RH side panel	1	**Color:**Red 107[r.]
22	GU89000059	RH side panel	1	**Color:** Black 532[b.]

Assembly	FRAME
Code	33.02
Description	Fairing
Revision	1

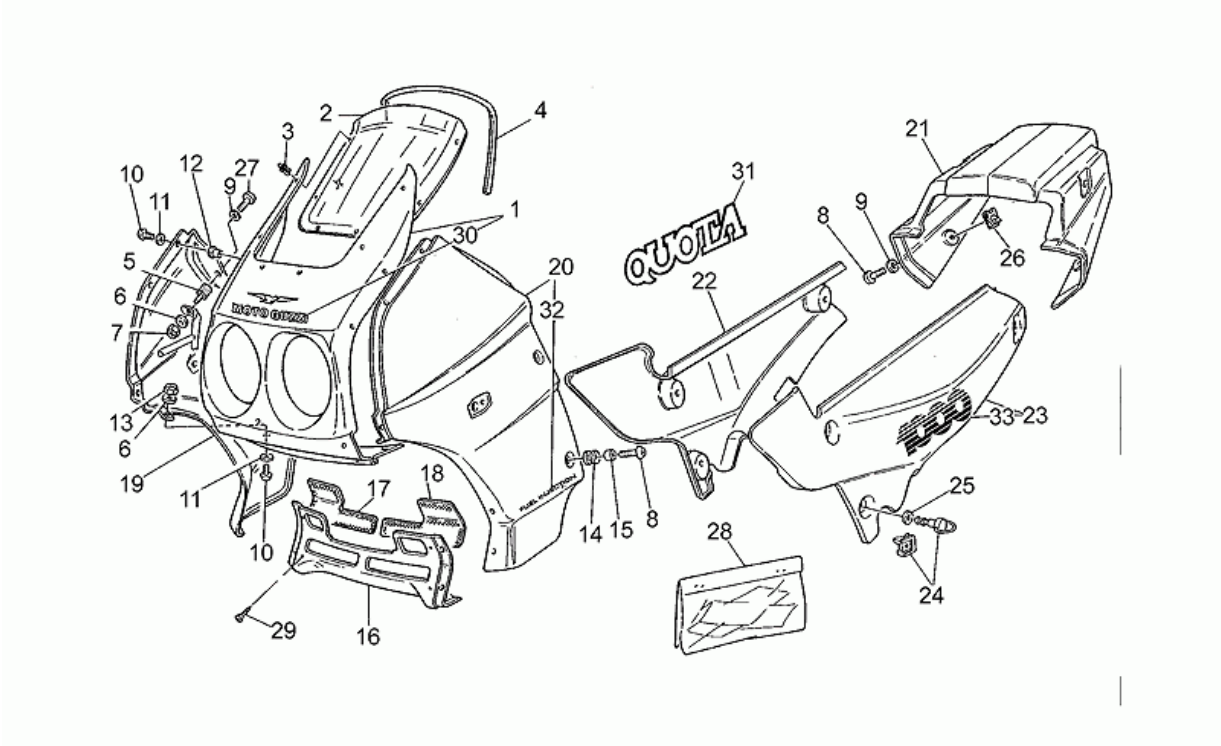

Pos.	Code	Description	Q.ty	Variants
				Technical Specifications: See spare parts comm.n.010 of 1997[01097N]
23	GU304763301	LH side panel	1	**Color:**Blank[gr]
23	GU30476331	LH side panel	1	**Color:**Metallized blue 227[m.b]
23	GU30476332	LH side panel	1	**Color:**Amaranth metallized 151[m.a]
23	GU30476333	LH side panel	1	**Color:**Red 107[r.]
23	GU89000060	LH side panel	1	**Color:** Black 532[b.] **Technical Specifications:**See spare parts comm.n.010 of 1997[01097N]
24	GU97250617	Pin	6	
25	GU30577800	Nylon washer 5,5X12X1	12	
26	GU28576590	Clip	2	
27	GU98230616	Screw	2	
28	GU30923330	Decal set	1	**Technical Specifications:**Green/white decal[D1]
29	GU99210311	Self-tap screw 2,9x9,5	6	
30	GU30917830	Decal "Moto Guzzi"	1	
31	GU30923530	Decal "Quota"	2	
32	GU30922530	Decal "Fuel Injection"	2	
33	GU30922130	Decal "1000"	2	

Assembly	FRAME
Code	33.03
Description	Lateral stand
Revision	1

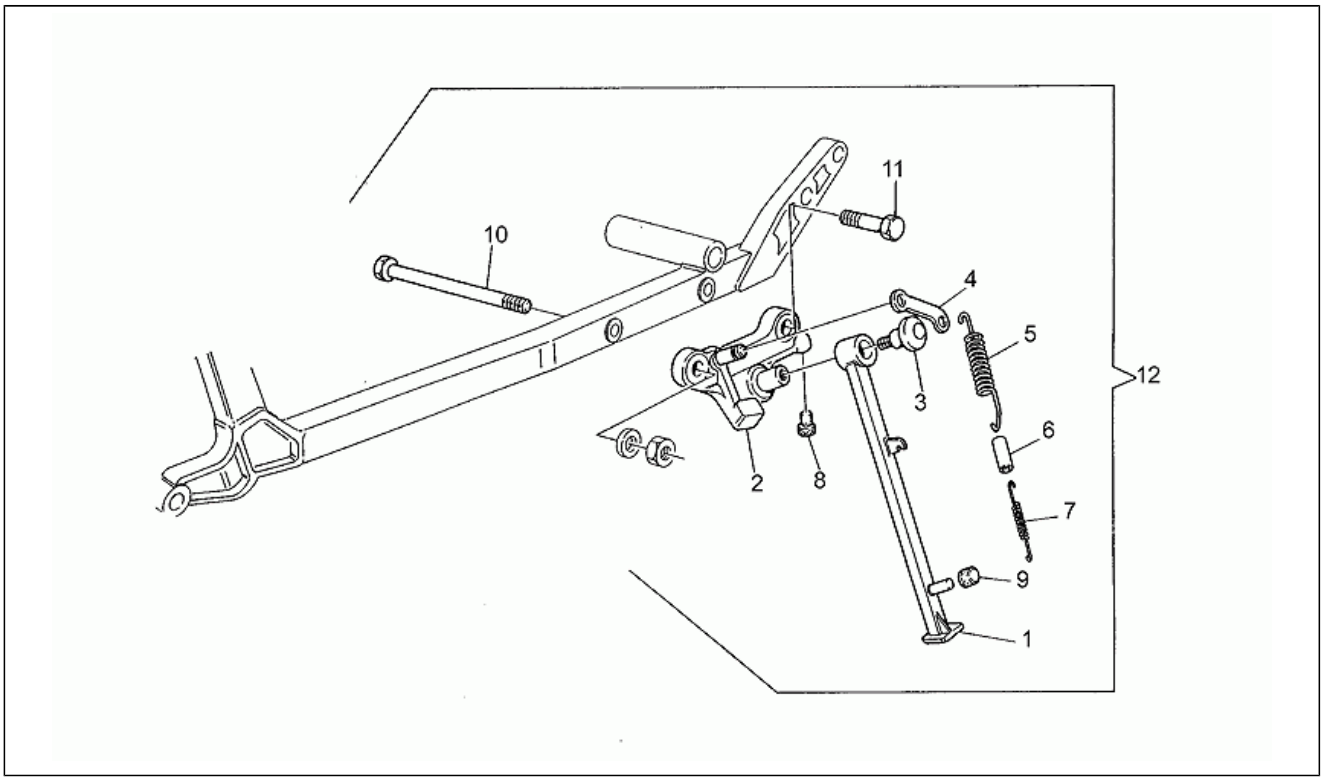

Pos.	Code	Description	Q.ty	Variants
1	GU30432130	Lateral stand	1	
2	GU30433430	Stand plate	1	
3	GU30433200	Central stand fixing screw	1	
4	GU30432700	Plate	1	
5	GU30434001	Outer spring	1	
6	GU30433800	Pipe	1	
7	GU30434000	Inner spring	1	
8	GU30433000	Drift	1	
9	GU14423800	Rubber spacer	1	
10	GU30429531	Screw	1	
11	GU98052565	Screw	1	
12	GU30432030001	Sidestand assy	1	

Assembly	FRAME
Code	33.04
Description	Bevel gear
Revision	1

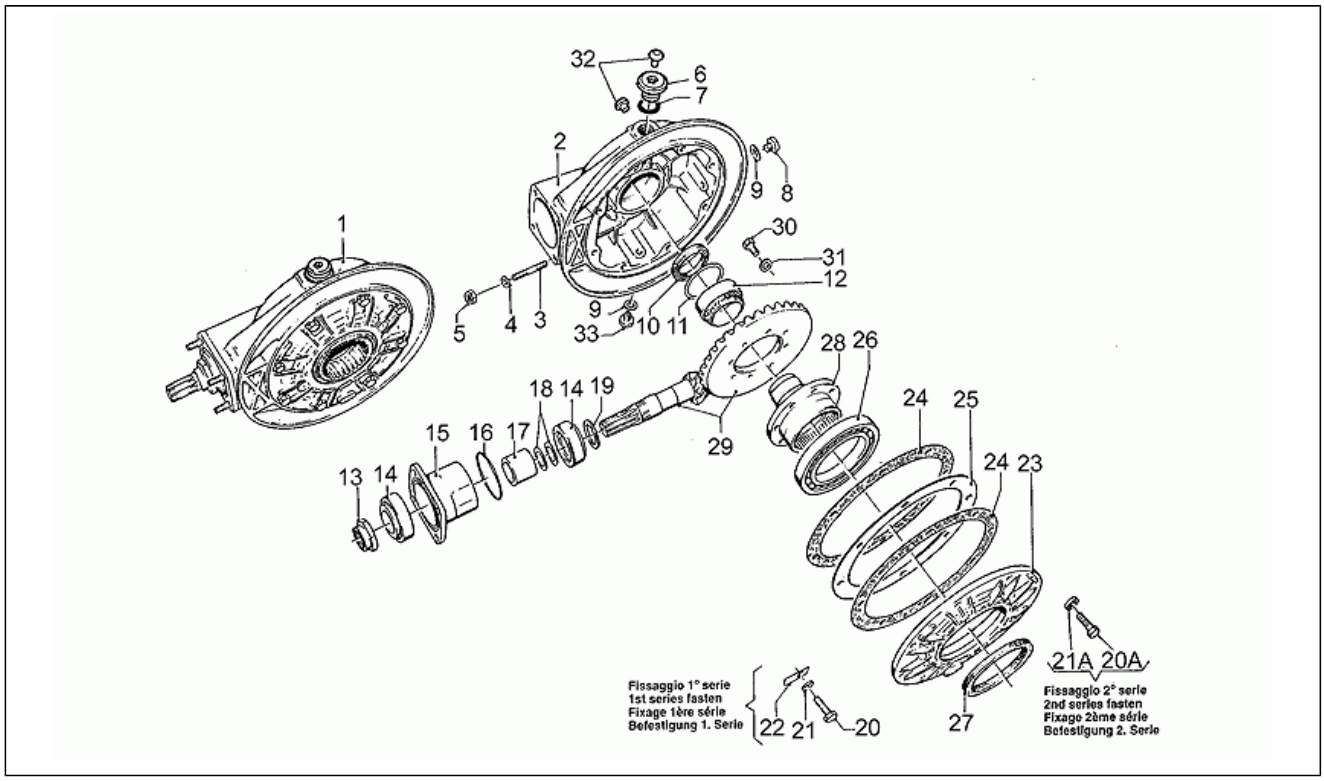

Pos.	Code	Description	Q.ty	Variants
1	GU17350250	Transmission complete	1	
1	GU30350285	Transmission complete 7/33	1	**Color:**Grey[gg]
2	GU28350345	Transmission box, blank	1	
2	GU30350360	Transmission housing	1	**Color:**Grey[gg]
3	GU96508045	Stud bolt 8x46	4	
4	GU14615901	Washer 8,4X13X0,8	4	
5	GU92750085	Nut	4	
6	GU12022600	Oil plug	1	
7	GU90706203	O-ring 20,24X2,62	1	
8	GU95980214	Oil level plug	1	
9	GU10528900	Gasket	2	
10	GU90403850	Gasket ring	1	
11	GU12351100	Gasket ring	1	
12	GU92254340	Roller bearing 40x55x17	1	
13	GU30356760	Nut	1	
14	GU92249227	Tap.roller bearing 25x5	2	
15	GU18352400	Flange	1	
16	GU90706584	Gasket 58,42x2,62	2	
17	GU18355100	Spacer	1	
18	GU12355202	Shim 0,1 mm	1	
18	GU12355203	Shim 0,15 mm	1	
19	GU19355320	Spacer 1 mm	1	
19	GU19355321	Spacer 1,1 mm	1	
19	GU19355322	Spacer 1,2 mm	1	
19	GU19355323	Spacer 1,3 mm	1	
19	GU19355324	Spacer 1,4 mm	1	
19	GU19355325	Spacer 1,5 mm	1	
19	GU19355326	Spacer 1,6 mm	1	

Assembly	FRAME
Code	33.04
Description	Bevel gear
Revision	1

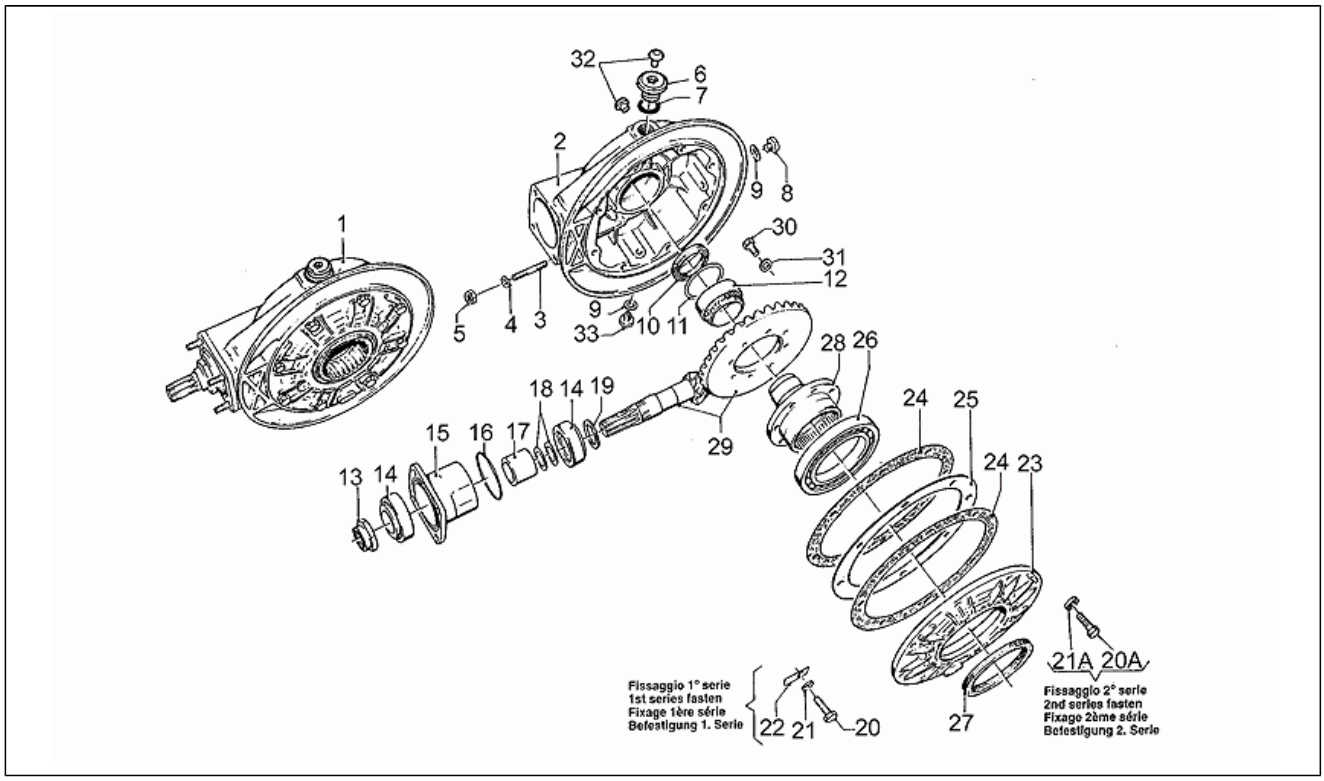

Pos.	Code	Description	Q.ty	Variants
19	GU19355327	Spacer 1,7 mm	1	
19	GU19355328	Spacer 1,8 mm	1	
19	GU19355329	Spacer 1,9 mm	1	
20	GU19357660	Screw M8X25	8	**Technical Specifications:**Second series[2A]
20	GU98054425	Screw M8X25	8	**Technical Specifications:**First series[1A]
21	GU14615901	Washer 8,4X13X0,8	8	**Technical Specifications:**Second series[2A]
21	GU61270300	Spring washer 8x15x0,3	8	**Technical Specifications:**First series[1A]
22	GU95187008	Plate	8	
23	GU17350400	Flange	1	
24	GU17350700	Gasket	2	
25	GU17355400	Spacer 0,8 mm	1	
25	GU17355402	Spacer 0,9 mm	1	
25	GU17355404	Spacer 1 mm	1	
25	GU17355406	Spacer 1,1 mm	1	
25	GU17355408	Spacer 1,2 mm	1	
25	GU17355410	Spacer 1,3 mm	1	
25	GU17355412	Spacer 1,5 mm	1	
26	GU92201070	Ball bearing 70x110x13	1	
27	GU90407085	Gasket ring	1	
28	GU17351400	Drive flange	1	
29	GU17354650	Bevel gear Z=7/33	1	
30	GU12356300	Screw	8	
31	GU14615901	Washer 8,4X13X0,8	8	
32	GU93180245	Plug	2	
33	GU31003766	Oil unload plug M10X1	1	

Assembly	FRAME
Code	33.05
Description	Dashboard
Revision	1

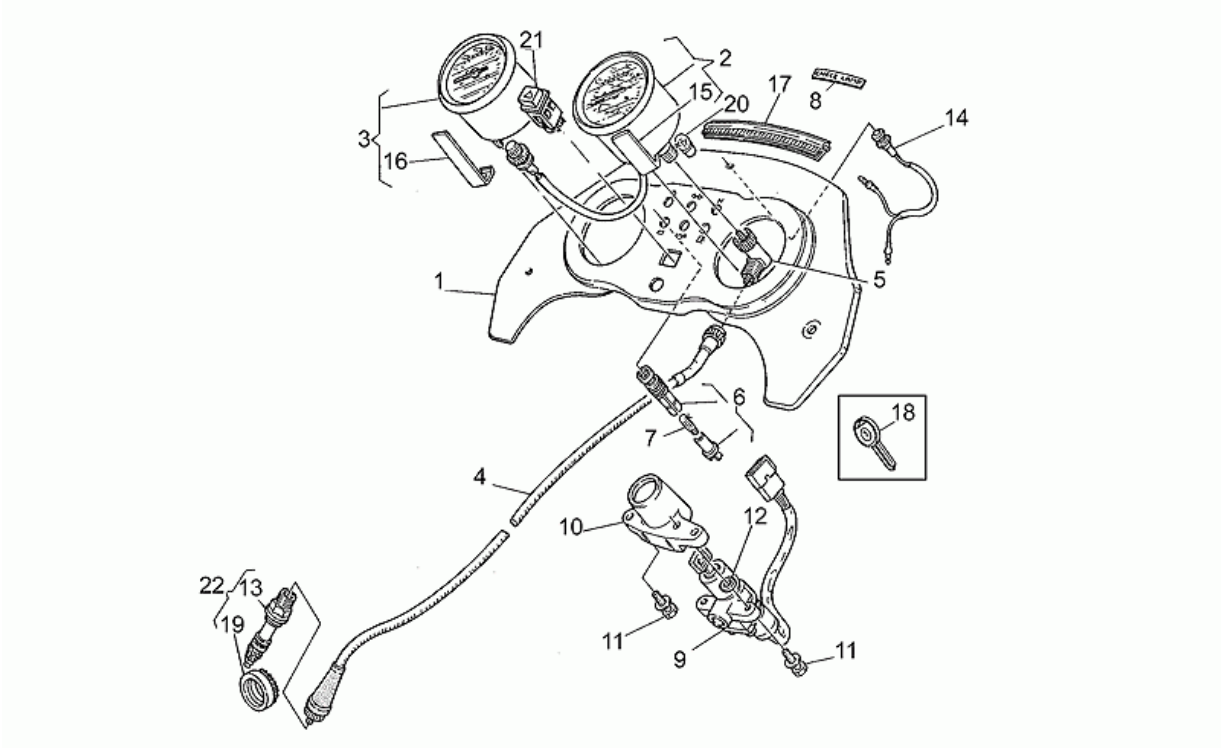

Pos.	Code	Description	Q.ty	Variants
1	GU30765230	Dashboard	1	
2	GU17762422	Speedometer	1	**Country:**Great Britain[UK]
2	GU30761530	Speedometer	1	
3	GU29767260	Tachometer MOTOPLAT	1	
4	GU28760410	Speedometer transmission	1	
5	GU17768360	Gear 90°	1	
6	GU30758000	Indicator lamp, green	2	
6	GU30758100	Indicator lamp, red	2	
6	GU30758200	Indicator lamp, blue	1	
6	GU30758330	Indicator lamp, orange	1	
7	GU93450134	Lamp 12V 2W	6	
8	GU30766330	Decal "Check Lamp"	1	
9	GU30782500	Key switch	1	
10	GU30783630	Protection	1	
11	GU97260425	Shear rivet	4	
12	GU95000208	Washer	2	
13	GU12763300	Pinion Z5	1	
14	GU29727860	Led	1	
15	GU29764960	Clamp	1	
16	GU29767860	Clamp	2	
17	GU30577930	Gasket	1	
18	GU30735500	Non indented key blank	1	
19	GU14766110	Chain ring Z11	1	
20	GU93450119	Lamp 12V-4W	2	
21	GU28745761	Turn indicator switch	1	
22	GU14762510	Gear Z5/11	1	

Assembly	FRAME
Code	33.06
Description	Headlight-Horn
Revision	1

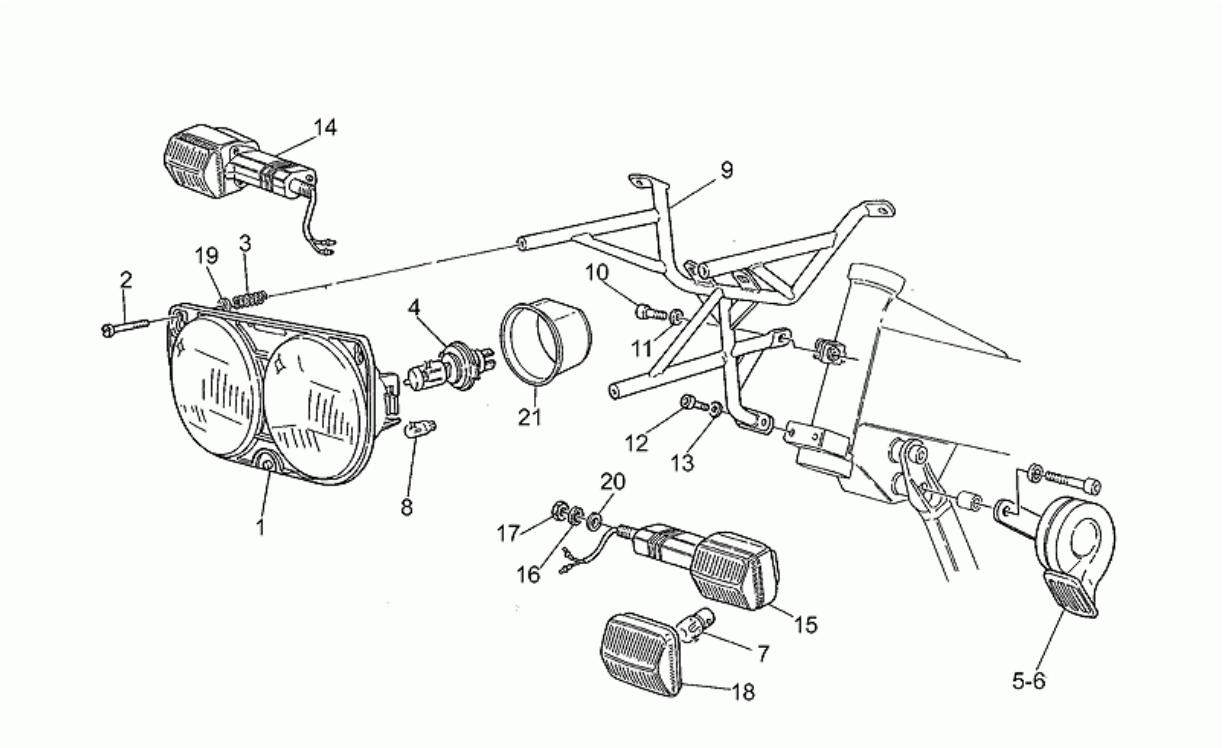

Pos.	Code	Description	Q.ty	Variants
1	GU30740530	Headlight	1	
1	GU30740534	Headlight	1	**Country:**Australia[AUS], Malaysia[MAL], Great Britain[UK]
2	GU98620240	Screw	3	
3	GU94321105	Lever return spring	3	
4	GU93450234	Halogen Lamp 12V-35/35W	2	
5	GU28743760	Treble horn	1	
6	GU28743761	Bass horn	1	
7	GU93450127	Lamp 12V-10W	2	
8	GU93450120	Lamp 12v-3w	2	
9	GU30578630	Front headlight supp.	1	
10	GU98622416	Screw	1	
11	GU95000208	Washer	1	
12	GU98622316	Hex socket screw M6X16	2	
13	GU95004206	Washer 6,15x11x0,8	2	
14	GU31750630	Blinker	1	
15	GU31750630	Blinker	1	
16	GU95021112	Notched washer	2	
17	GU92602512	Low nut M12x1,25	2	
18	GU31753730	Blinker lens	2	
19	GU95000205	Washer	3	
20	GU95000213	Washer	2	
21	GU30741330	Guard	2	

Assembly	FRAME
Code	33.07
Description	Taillight
Revision	1

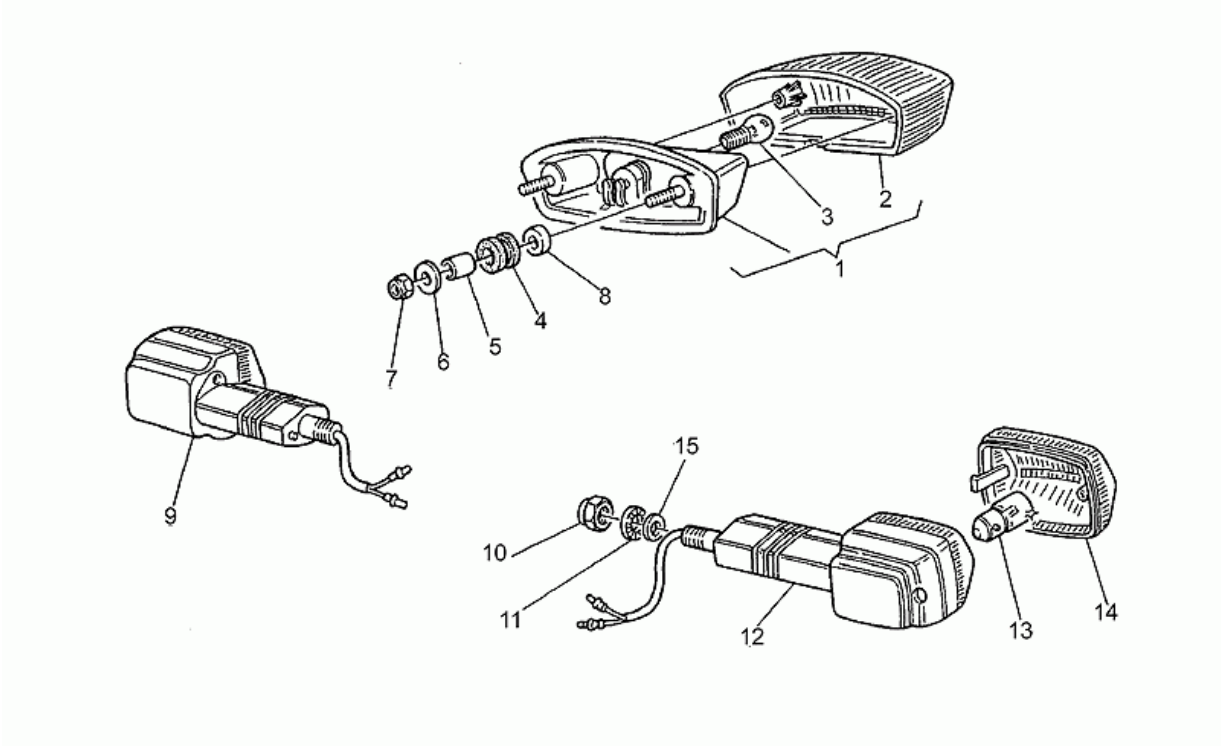

Pos.	Code	Description	Q.ty	Variants
1	GU31740960	Taillight	1	
2	GU31741760	Taillight lens	1	
3	GU93450224	Lamp 12V/5-21W	1	
4	GU91551085	Rubber spacer	2	
5	GU91180607	Spacer	2	
6	GU95100118	Washer 6,2X18X1	2	
7	GU92630106	Nut M6x1	2	
8	GU91180605	Spacer	2	
9	GU31750630	Blinker	1	
10	GU92602512	Low nut M12x1,25	2	
11	GU95021112	Notched washer	2	
12	GU31750630	Blinker	1	
13	GU93450127	Lamp 12V-10W	2	
14	GU31753730	Blinker lens	2	
15	GU95000213	Washer	2	

Assembly	FRAME
Code	33.08
Description	Front fork
Revision	1

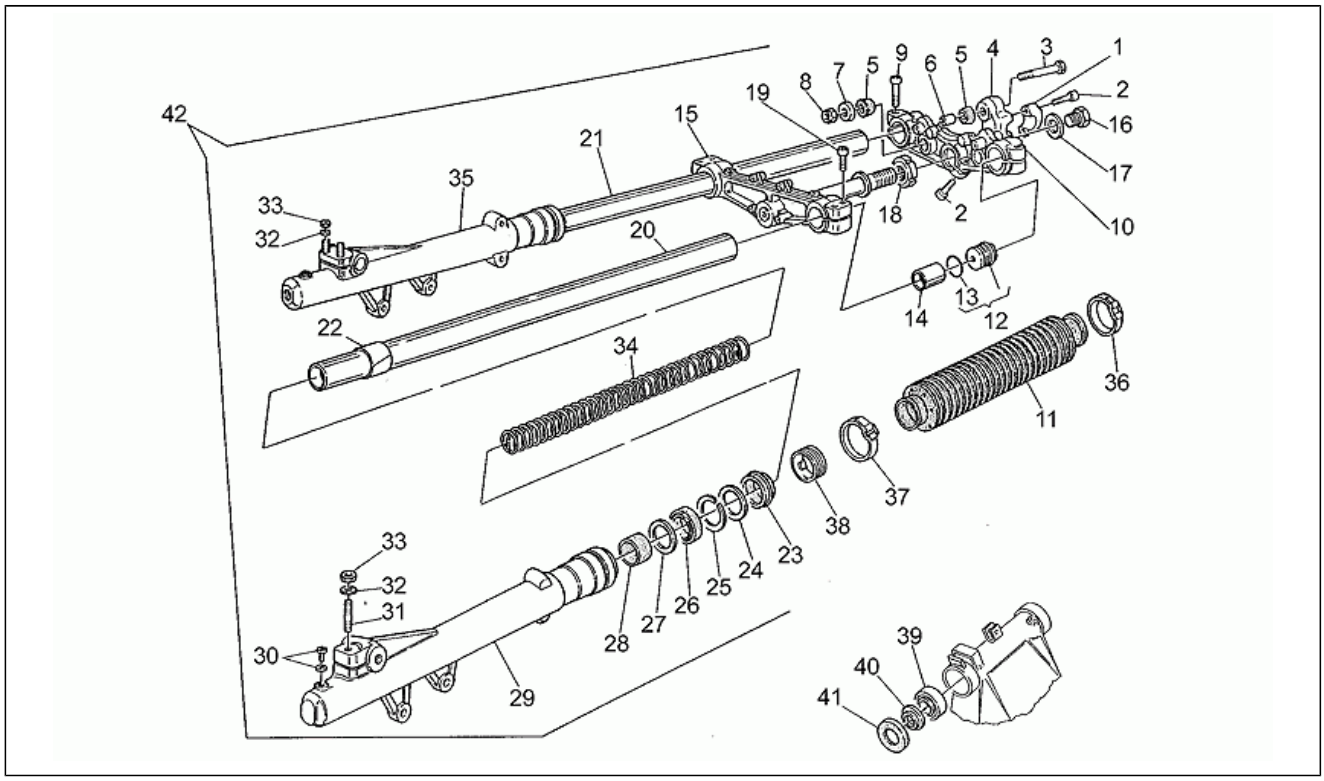

Pos.	Code	Description	Q.ty	Variants
1	GU30500630	Upper U-bolt	2	
2	GU66530505	Screw M8x30	5	
3	GU30530544	Screw	2	
4	GU30500230	Lower U-bolt	2	
5	GU27530503	Rubber spacer	4	
6	GU27530504	Pipe	2	
7	GU27530505	Cup	2	
8	GU27530506	Nut	2	
9	GU98622435	Screw	2	
10	GU30493130	Fork upper plate	1	
11	GU30530541	Anti-dust tube	2	
12	GU30530542	Plug	2	
13	GU30530508	O-ring	2	
14	GU30530551	Pipe	2	
15	GU30494030	Lower plate	1	
16	GU30512830	Nut M20x1,5	1	
17	GU27530510	Washer	1	
18	GU27530511	Ring nut	1	
19	GU98620335	Screw M6X35	4	
20	GU30525331	LH hub	1	
21	GU30525330	RH hub	1	
22	GU30530515	Bush	2	
23	GU30530534	Dust cover	2	
24	GU30530531	Washer	2	
25	GU30530532	Stop ring	2	
26	GU30530502	Oil seal	2	
27	GU37530506	Cup	2	
28	GU30530520	Bush	2	

Assembly	FRAME
Code	33.08
Description	Front fork
Revision	1

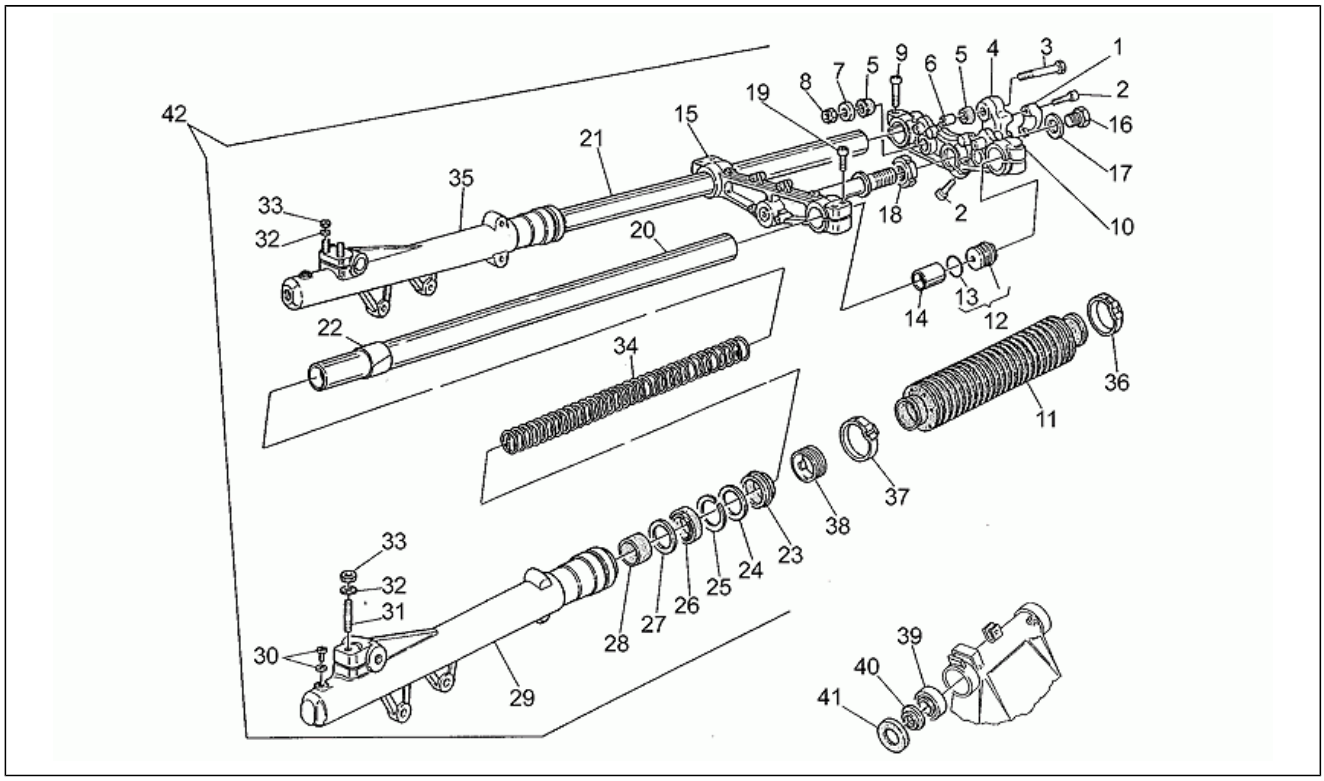

Pos.	Code	Description	Q.ty	Variants
29	GU30522630	LH sleeve	1	
30	GU30530521	Screw with OR	2	
31	GU30530530	Stud bolt	3	
32	GU27530521	Washer	3	
33	GU27530520	Self-locking nut	3	
34	GU30526630	Spring	2	
35	GU30522530	RH sleeve	1	
36	GU30530539	Top hose clamp	2	
37	GU30530538	Bottom hose clamp	2	
38	GU30530540	Ring	2	
39	GU92249225	Tap.roller bearing	2	
40	GU14516700	Clearance washer	2	
41	GU14517000	Dust cover	2	
42	GU30490230	Front fork	1	

Assembly	FRAME
Code	33.09
Description	Swing arm
Revision	1

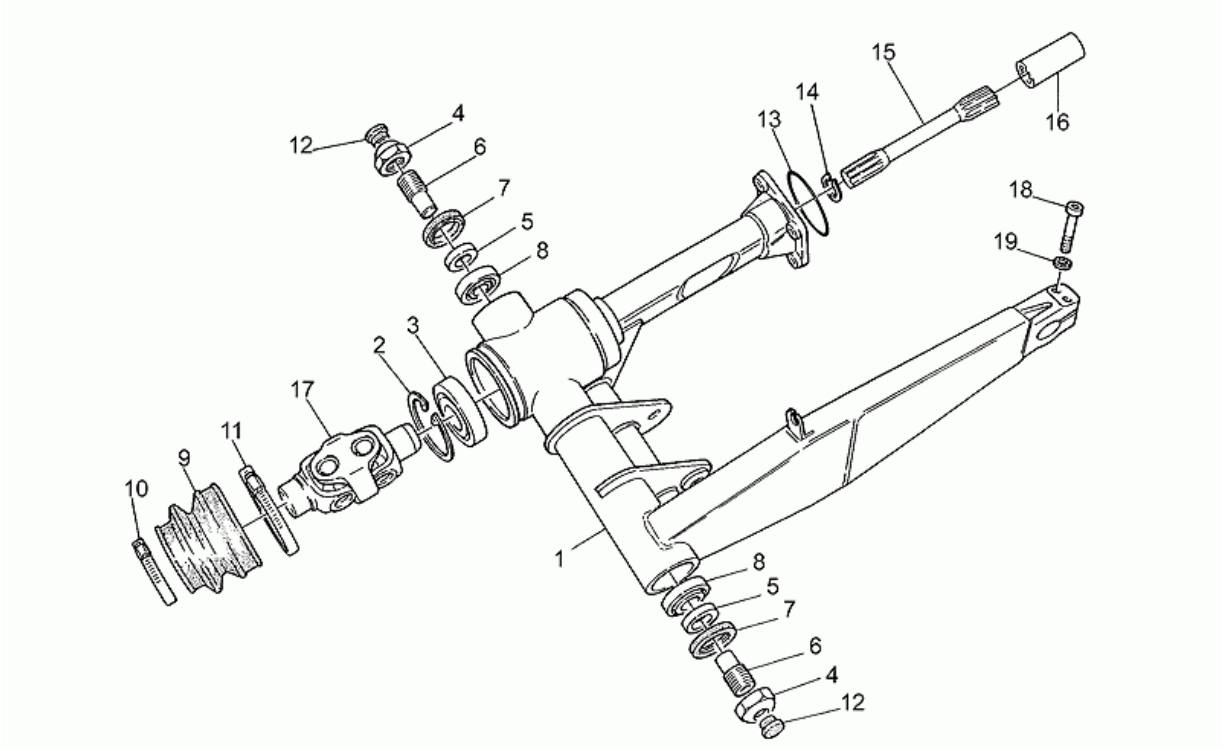

Pos.	Code	Description	Q.ty	Variants
1	GU30540230	Rear fork grey	1	
2	GU90272062	Circlip	1	
3	GU92204230	Ball bearing 30x62x16	1	
4	GU14547800	Nut	2	
5	GU12547200	Spacer	2	
6	GU14547001	Pin	2	
7	GU90403040	Gasket ring	2	
8	GU92249217	Bearing	2	
9	GU18548000	Protection collar	1	
10	GU93305060	Hose clamp 60x62x10	1	
11	GU93305078	Clamp	1	
12	GU93180105	Plug	2	
13	GU90706584	Gasket 58,42x2,62	1	
14	GU90271020	Snap ring	1	
15	GU29326300	Drive shaft	1	
16	GU12327700	Hose	1	
17	GU30328031	Coupling	1	
18	GU98610435	Screw	2	
19	GU61270300	Spring washer 8x15x0,3	2	

Assembly	FRAME
Code	33.10
Description	Electrical system
Revision	1

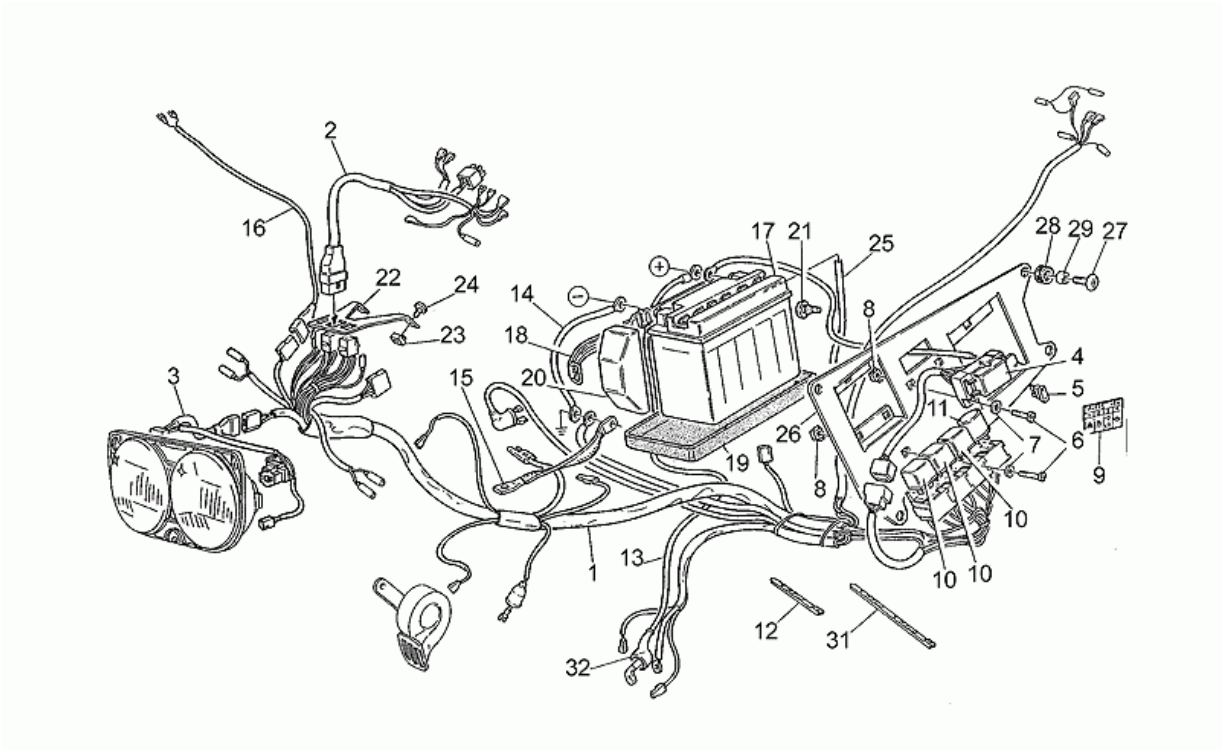

Pos.	Code	Description	Q.ty	Variants
1	GU30747130	Main wiring harness	1	
2	GU30747230	Dashboard cable	1	
3	GU30747430	Headlight wiring w/harness	1	
4	GU30743000	Fuse holder box	1	
5	GU28742560	Fuse 15A	6	
6	GU98202516	Screw	4	
7	GU95100059	Washer 5,25x14x1,5	4	
8	GU92660501	Captive nut	4	
9	GU30945000	Fuse table decal	1	
10	GU30732510	Starting relay	1	
11	GU17750520	Flasher unit	1	
12	GU14609650	Hose clamp 3,6x20,6	14	
13	GU30748430	Wire	1	
14	GU19748000	Wire	1	
15	GU30747930	Engine-frame ground wiring	1	
16	GU30724630	Front b.l. switch wiring	1	
17	GU30704500	Battery YB 16B-A	1	
17	GU31704560	Battery Y50-N18L-A	1	
18	GU30704830	Battery fixing snap	1	
19	GU30707030	Battery holder	1	
20	GU14705350	Accumulator fixing wedge	1	
21	GU19705900	Drift	2	
22	GU28749778	Plate	1	
23	GU92660601	Captive nut	2	
24	GU98326014	Screw	2	
25	GU00823946060	Breather pipe	1	
26	GU30472630	Support	1	
27	GU98230616	Screw	4	

Assembly	FRAME
Code	33.10
Description	Electrical system
Revision	1

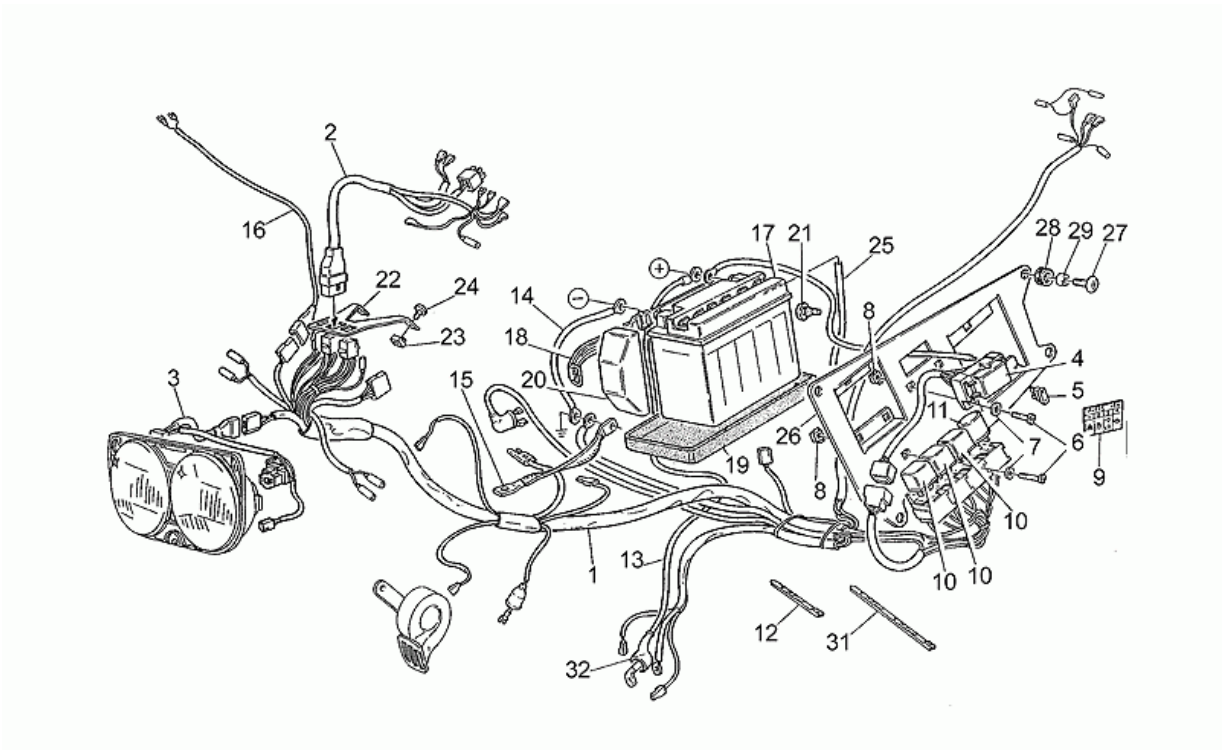

Pos.	Code	Description	Q.ty	Variants
28	GU91551085	Rubber spacer	4	
29	GU91180607	Spacer	4	
31	GU93304390	Hose clamp 3,6x375	3	
32	GU19707100	Cap	1	

Assembly	FRAME
Code	33.11
Description	Handlebar - Controls
Revision	1

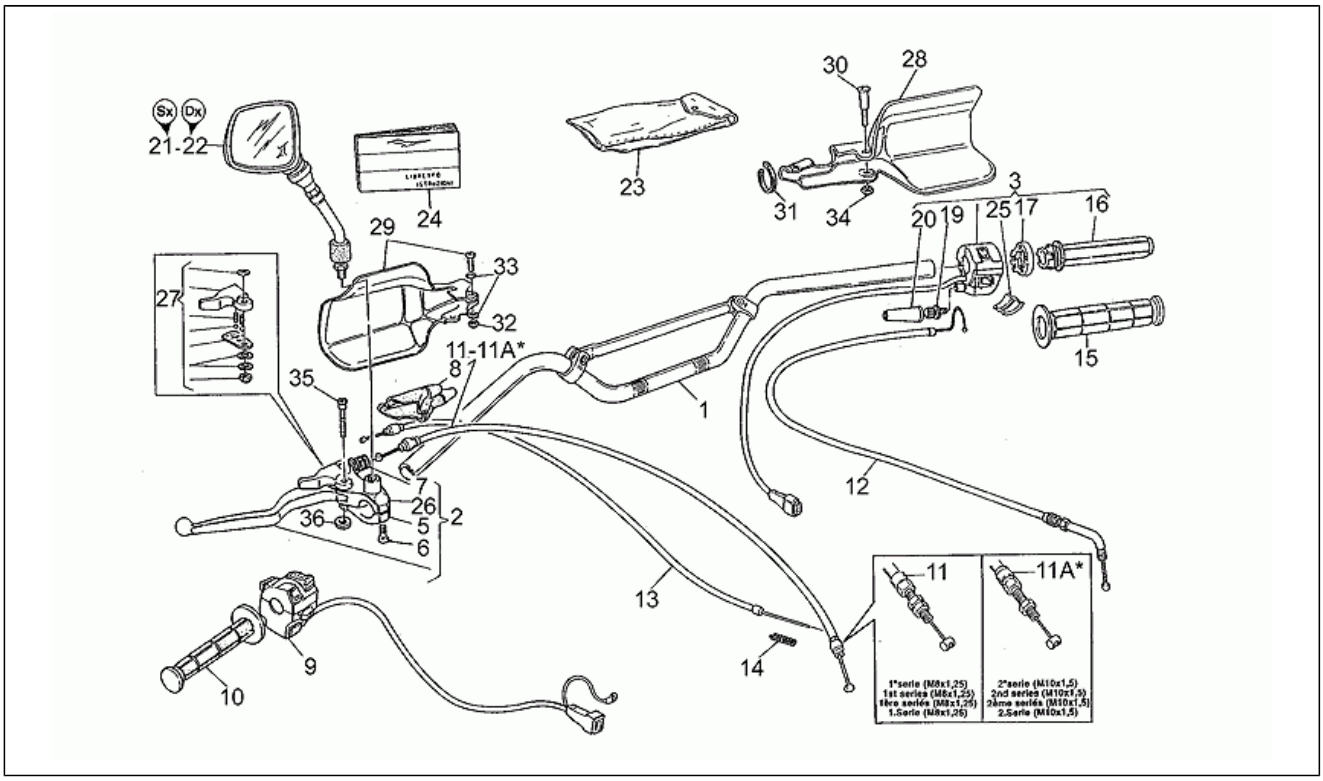

Pos.	Code	Description	Q.ty	Variants
1	GU30600130	Handlebar	1	
2	GU30605530	Clutch lever cpl.	1	
3	GU27603400	Throttle	1	
5	GU27601015	U-bolt	1	
6	GU27601215	Screw	2	
7	GU30602500	Register	1	
8	GU27663815	Protection	1	
9	GU27738015	LH lights selector	1	
10	GU27603016	LH hand grip	1	
11	GU29093070	Clutch cable m8x1,25	1	
11	GU29093071	Clutch cable	1	
12	GU30117530	Throttle	1	
13	GU30132830	Choke control	1	
14	GU94321070	Spring	1	
15	GU27603516	RH hand grip	1	
16	GU27603815	Mobile body	1	
17	GU27604415	Steering block	1	
19	GU27603715	Adjuster screw	1	
20	GU27117615	Cap	1	
21	GU30769430	LH rearview mirror	1	**Technical Specifications:**See technical comm.n.318 of 1996[31896C]
22	GU30769830	RH rearview mirror	1	**Technical Specifications:**See technical comm.n.318 of 1996[31896C]
23	GU37909905	Toolkit	1	
24	GU30900030	Operator's handbook	1	**Country:**Germany[D], France[F], Italy[I], Great Britain[UK]
25	GU27604515	Cable guide	1	
26	GU27601815	Clutch lever U-bolt	1	
27	GU27659415	Starter lever	1	

Assembly	FRAME
Code	33.11
Description	Handlebar - Controls
Revision	1

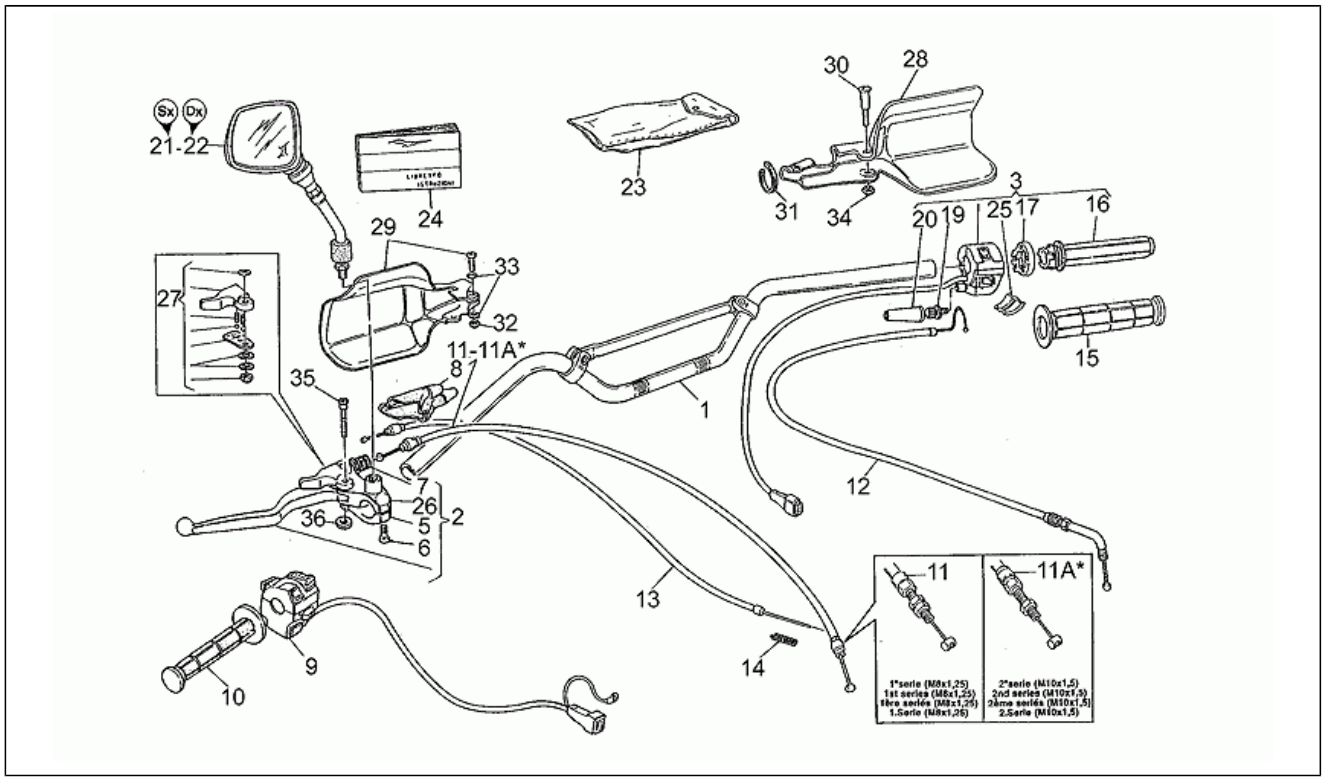

Pos.	Code	Description	Q.ty	Variants
28	GU305929301	RH handguard	1	**Color:**Blank[gr]
28	GU30592931	RH handguard	1	**Color:**Metallized blue 227[m.b]
28	GU30592932	RH handguard	1	**Color:**Amaranth metallized 151[m.a]
28	GU30592933	RH handguard	1	**Color:**Red 107[r.]
28	GU89000062	RH handguard	1	**Color:** Black 532[b.] **Technical Specifications:**See spare parts comm.n.010 of 1997[01097N]
29	GU30593030	LH handguard	1	**Color:**Amaranth metallized 151[m.a]
29	GU305930301	LH handguard	1	**Color:**Blank[gr]
29	GU30593031	LH handguard	1	**Color:**Metallized blue 227[m.b]
29	GU30593033	LH handguard	1	**Color:**Red 107[r.]
29	GU89000063	LH handguard	1	**Color:** Black 532[b.] **Technical Specifications:**See spare parts comm.n.010 of 1997[01097N]
30	GU30604830	Screw	1	
31	GU14609650	Hose clamp 3,6x20,6	1	
32	GU92630104	Nut M4x0,7	1	
33	GU95000204	Washer	2	
34	GU92630206	Nut M6x1	1	
35	GU30604330	Screw	1	
36	GU95100123	Washer	1	

Assembly	FRAME
Code	33.12
Description	Front/rear mudguards
Revision	1

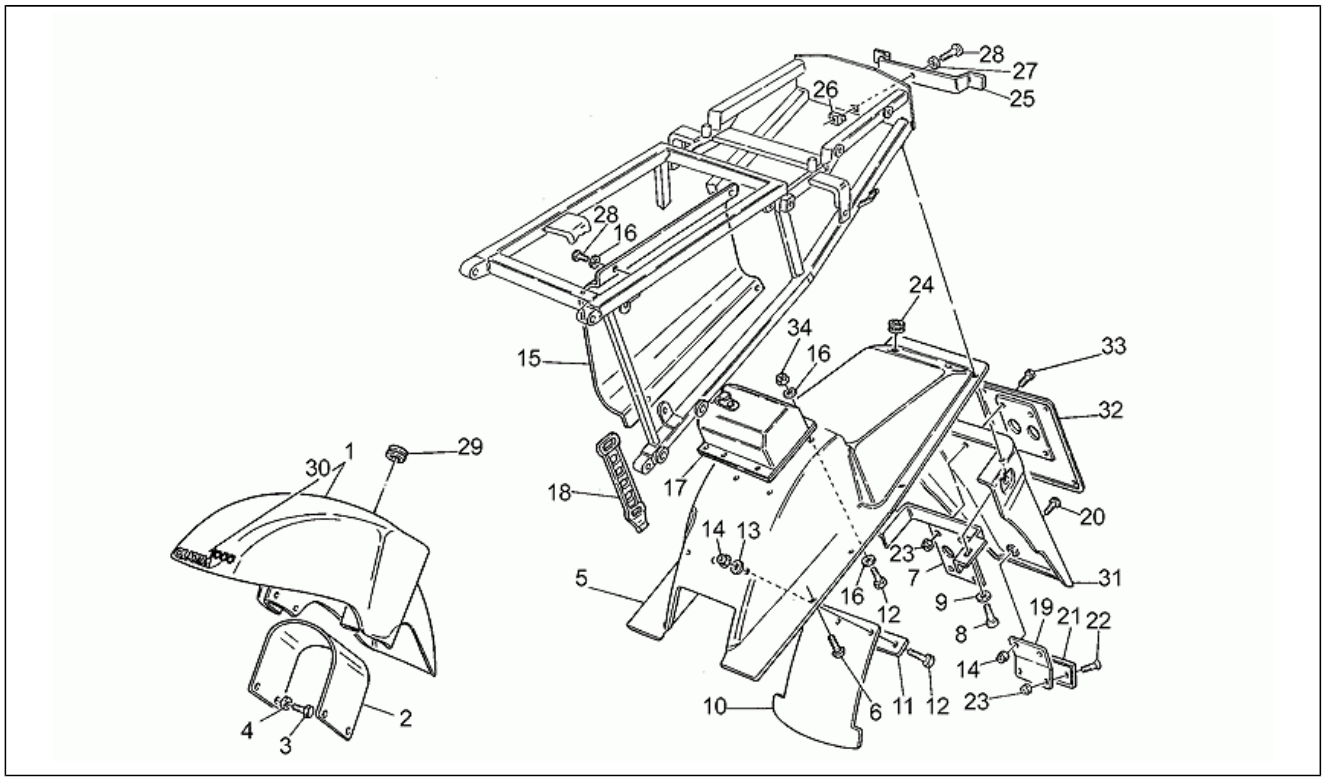

Pos.	Code	Description	Q.ty	Variants
1	GU304344301	Front mudguard	1	**Color:**Blank[gr]
1	GU30434431	Front mudguard	1	**Color:**Metallized blue 227[m.b]
1	GU30434432	Front mudguard	1	**Color:**Amaranth metallized 151[m.a]
1	GU30434433	Front mudguard	1	**Color:**Red 107[r.]
1	GU89000058	Front mudguard	1	**Color:** Black 532[b.] **Technical Specifications:**See spare parts comm.n.010 of 1997[01097N]
2	GU30436630	Front mudguard support	1	
3	GU98054320	Hex screw M6X20	4	
4	GU95000206	Washer	4	
5	GU30437030	Rear mudguard	1	
6	GU98230616	Screw	4	
7	GU30438530	Splash guard support	1	
8	GU98612320	Screw	2	
9	GU61013800	Special washer	2	
10	GU30438930	Shock absorber cover	1	
11	GU30439330	Plate	1	
12	GU98054316	Hex screw M6X16	7	
13	GU95100118	Washer 6,2X18X1	3	
14	GU92630106	Nut M6x1	5	
15	GU30414330	Protection	1	
16	GU95004206	Washer 6,15x11x0,8	12	
17	GU30479630	Toolbox	1	
18	GU29728960	Fixing snap	1	
19	GU30437430	Plate	1	
20	GU98622214	Screw	2	
21	GU31745860	Rear reflector	1	
22	GU98250516	Screw	2	

Assembly	FRAME
Code	33.12
Description	Front/rear mudguards
Revision	1

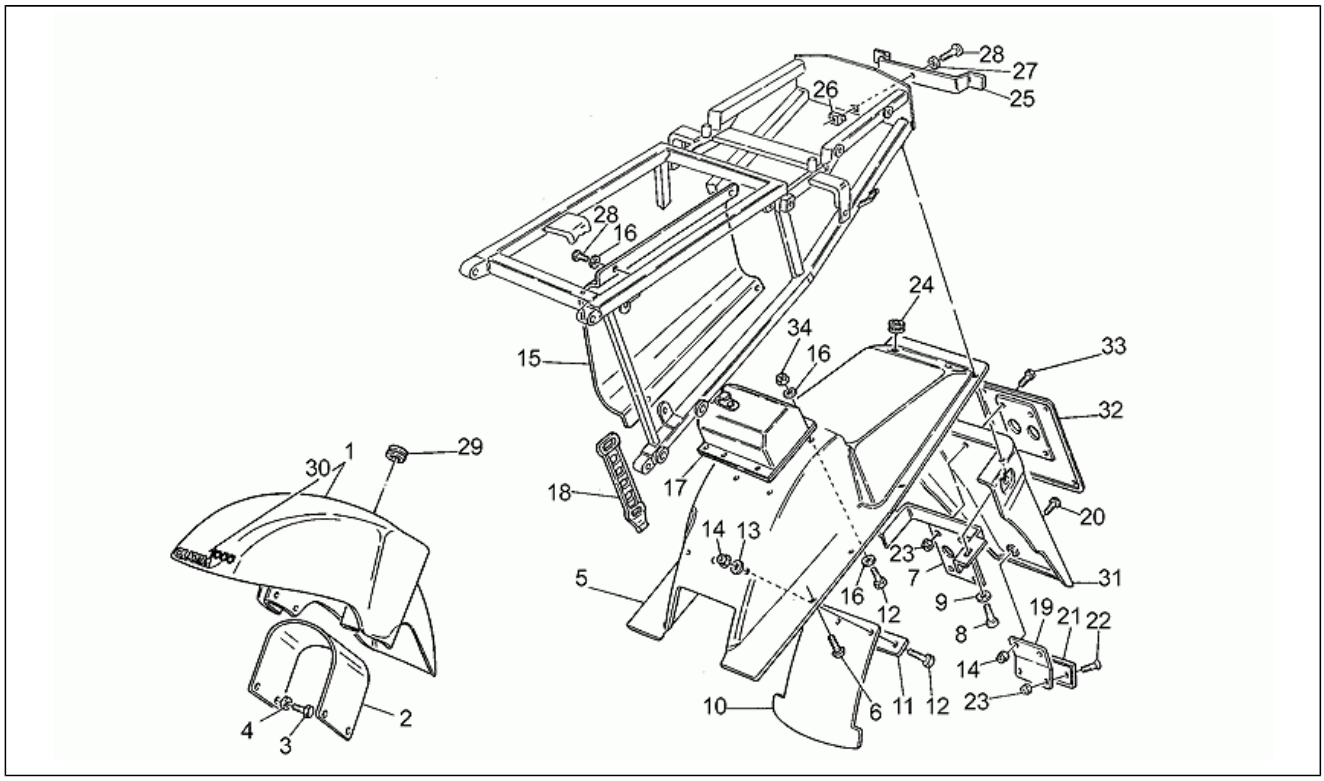

Pos.	Code	Description	Q.ty	Variants
23	GU92630105	Nut	6	
24	GU91551062	Rubber spacer	2	
25	GU30468230	Clamp	1	
26	GU92660601	Captive nut	1	
27	GU29577860	Washer	1	
28	GU98230612	Screw	5	
29	GU93180216	Rubber spacer	1	
30	GU30926132	Decal "Quota 1000"	1	
31	GU30474630	Splash guard	1	
32	GU39474600	Number plate holder	1	
33	GU98054216	Screw	4	
34	GU92602206	Nut	4	

Assembly	FRAME
Code	33.13
Description	Front master cilinder
Revision	1

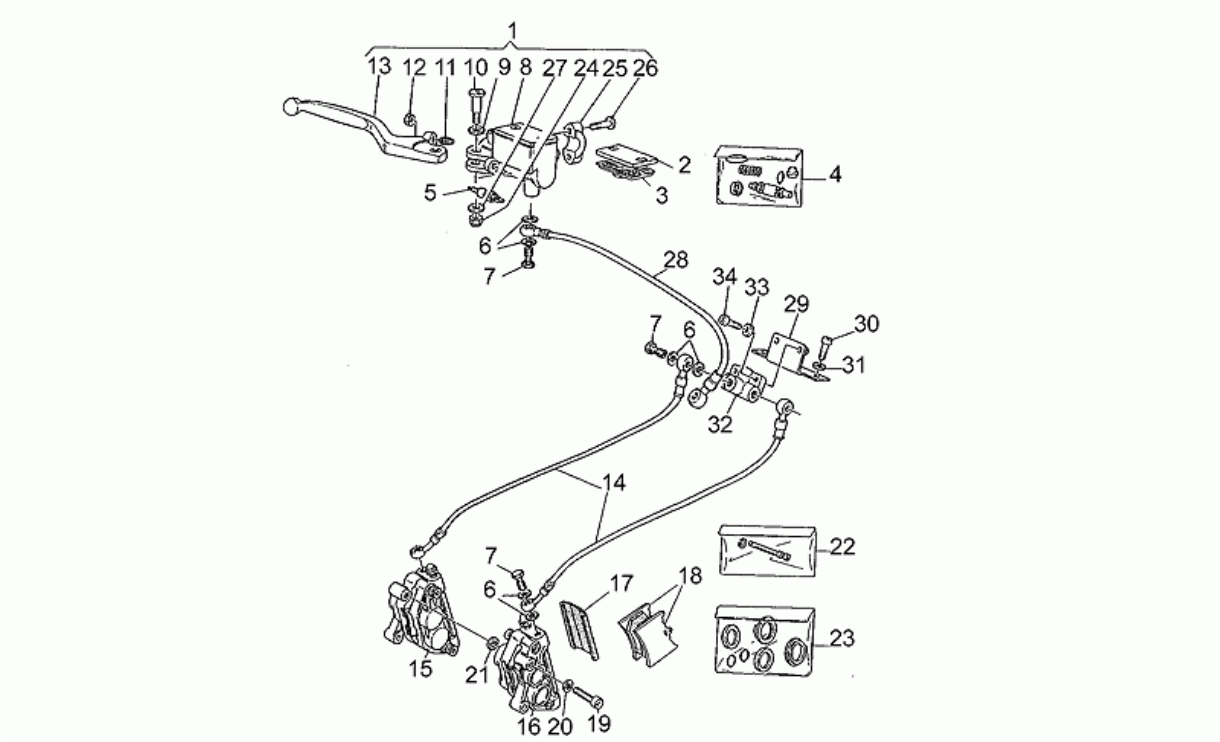

Pos.	Code	Description	Q.ty	Variants
1	GU30660130	Front master cilinder	1	
2	GU30661130	Pump cover	1	
3	GU30661330	Diaphragm	1	
4	GU30659330	Brake mast.cyl rev. kit	1	
5	GU39741101	Brake light switch	1	
6	GU25656100	Gasket	12	
7	GU95990028	Oil pipe screw *	6	
8	GU30660230	Front master cilinder	1	
9	GU95001208	Washer	1	
10	GU30604830	Screw	1	
11	GU30530547	Adjuster screw	1	
12	GU30530546	Nut	1	
13	GU30605630	Front brake lever	1	
14	GU30658830	Front lower brake line	2	
15	GU30652230	RH front brake caliper	1	
16	GU30652330	LH front brake caliper	1	
17	GU66654730	Cover	2	
18	GU30654631	Front pads pair	2	
19	GU98610440	Screw	4	
20	GU19149800	Washer 10,5x16x1	4	
21	GU95100250	Washer 8,5X18X0,5	1	
21	GU95100251	Washer 8,5X18X0,8	1	
22	GU66659130	Pin revision kit	2	
23	GU66659030	Brake caliper rev. kit	2	
24	GU92630206	Nut M6x1	1	
25	GU30530549	U-bolt	1	
26	GU30530548	Screw	2	
27	GU95001206	Washer	1	

Assembly	FRAME
Code	33.13
Description	Front master cilinder
Revision	1

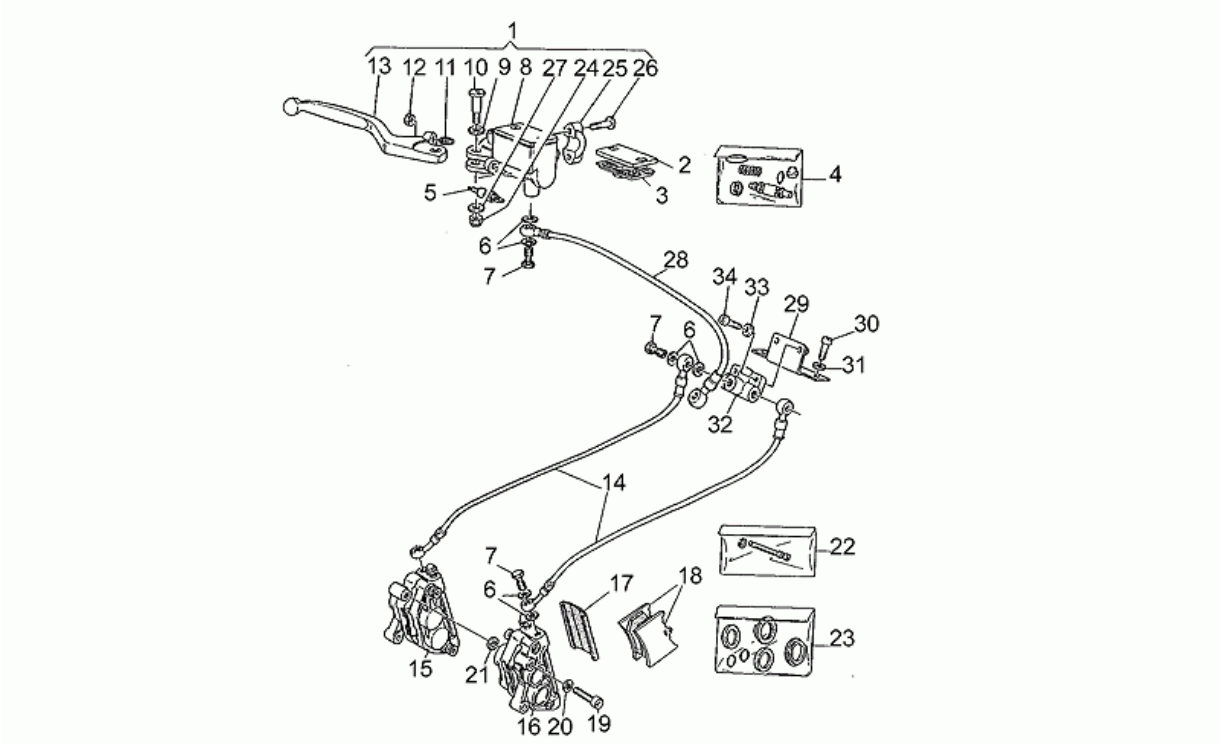

Pos.	Code	Description	Q.ty	Variants
28	GU30657530	Front top brake line	1	
29	GU30655630	Clamp	1	
30	GU98612316	Hex socket screw M6x16	2	
31	GU14217901	Washer 6,4x10x0,7	2	
32	GU66656830	Splitter	1	
33	GU29217960	Washer 5,9X3X0,8	2	
34	GU98612216	Hex socket screw M5x16	2	

Assembly	FRAME
Code	33.14
Description	Rear master cylinder
Revision	1

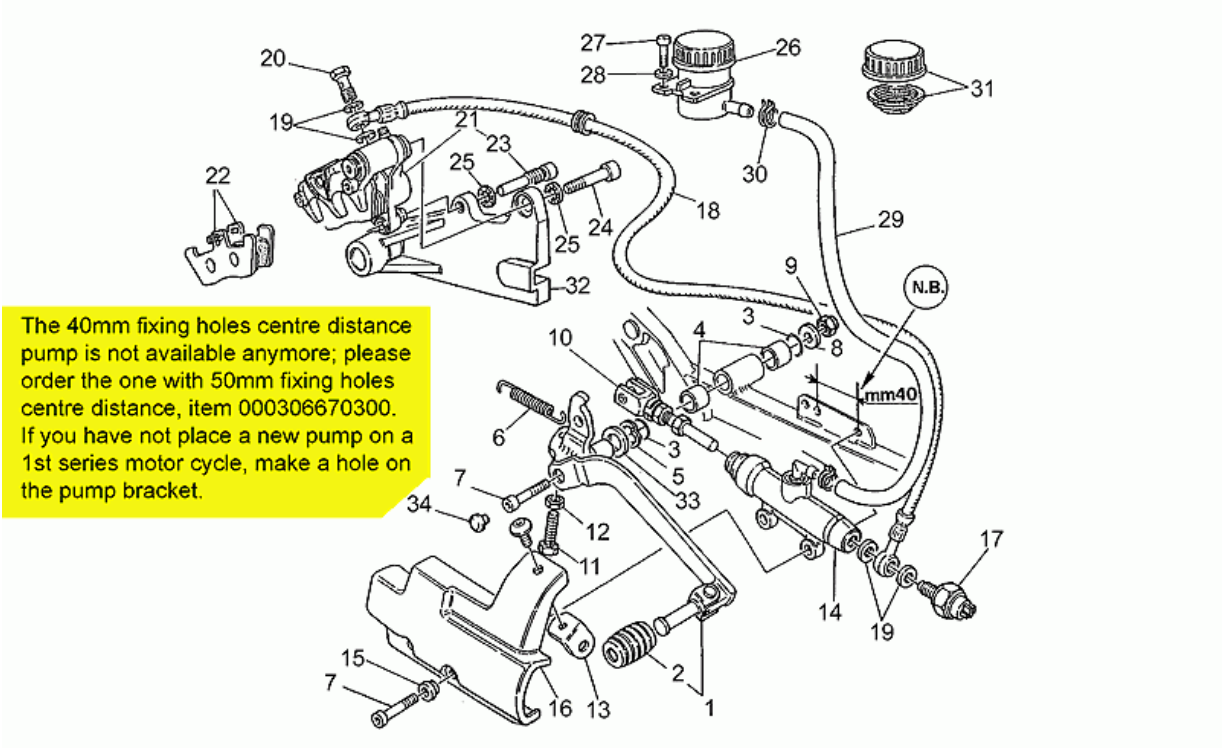

Pos.	Code	Description	Q.ty	Variants
1	GU30677030	Rear brake lever, chrome	1	
1	GU30677032	Rear brake lever	1	
2	GU27251015	Rubber spacer	1	
3	GU90706141	O-ring	2	
4	GU30252930	Spacer	2	
5	GU95129260	Spring washer	1	
6	GU17667651	Spring	1	
7	GU98610330	Screw M6x30	3	
8	GU95100142	Washer	1	
9	GU92630206	Nut M6x1	1	
10	GU30675030	Clamp	1	**Technical Specifications:**Distance between holes 40[F1]
10	GU30675031	Clamp	1	**Technical Specifications:**Distance between holes 50[F2]
11	GU98074430	Adjuster screw	1	
12	GU92601208	Nut	1	
13	GU30668730	Plate	1	
14	GU30667030	Rear master cylinder	1	**Technical Specifications:**Distance between holes 50[F2]
15	GU30667730	Spacer	2	
16	GU30665630	Cover	1	
17	GU14657050	Brake light switch	1	
18	GU30657130	Rear brake hose	1	
19	GU25656100	Gasket	4	
20	GU95990028	Oil pipe screw *	1	
21	GU30653030	Rear brake caliper	1	
22	GU30654630	Rear pads pair	1	
23	GU30652630	Screw	1	
24	GU98620550	Screw	1	
25	GU95129180	Washer 10,5X18X0,8	2	
26	GU65663500	Brake oil tank	1	

Assembly	FRAME
Code	33.14
Description	Rear master cylinder
Revision	1

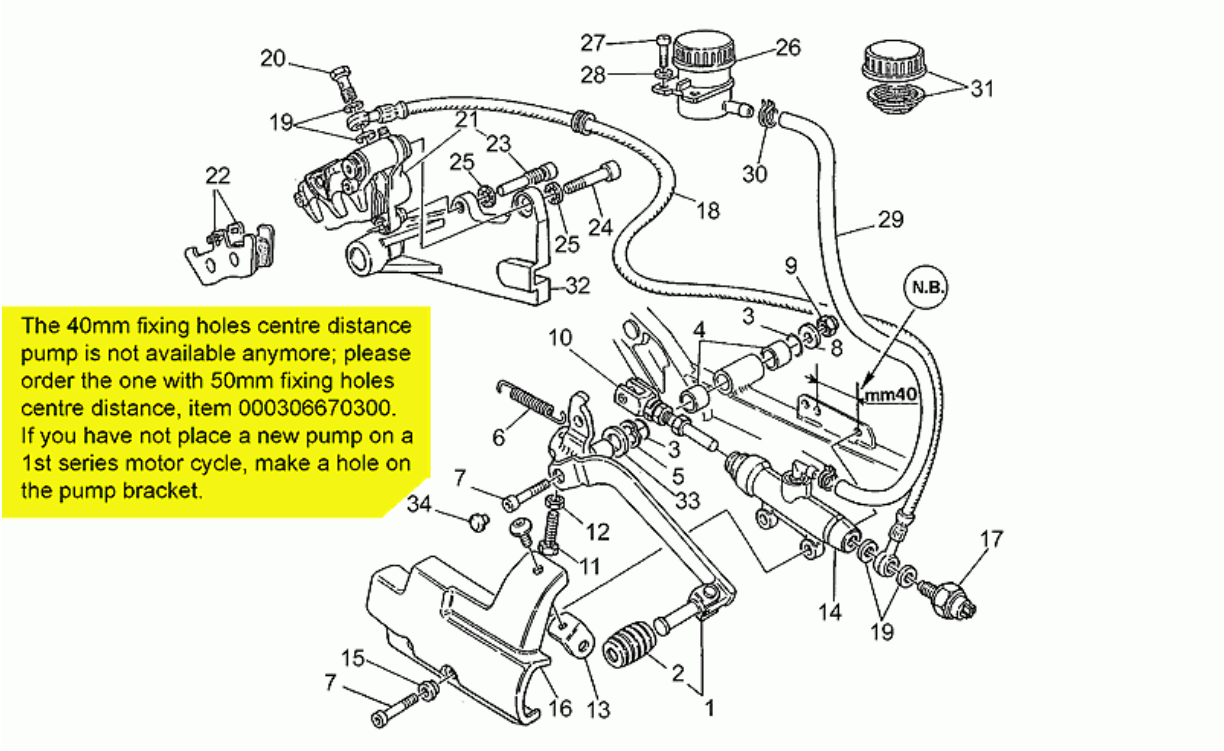

Pos.	Code	Description	Q.ty	Variants
27	GU98622314	Screw	2	
28	GU95004206	Washer 6,15x11x0,8	2	
29	GU00823950050	Oil pipe	1	
30	GU19157800	Hose clamp	2	
31	GU17661052	Tank cap	1	
32	GU30635830	Rear brake caliper support	1	
33	GU95100601	Washer	1	
34	GU12433000	Drift	1	

Assembly	FRAME
Code	33.15
Description	Frame reinforcement
Revision	1

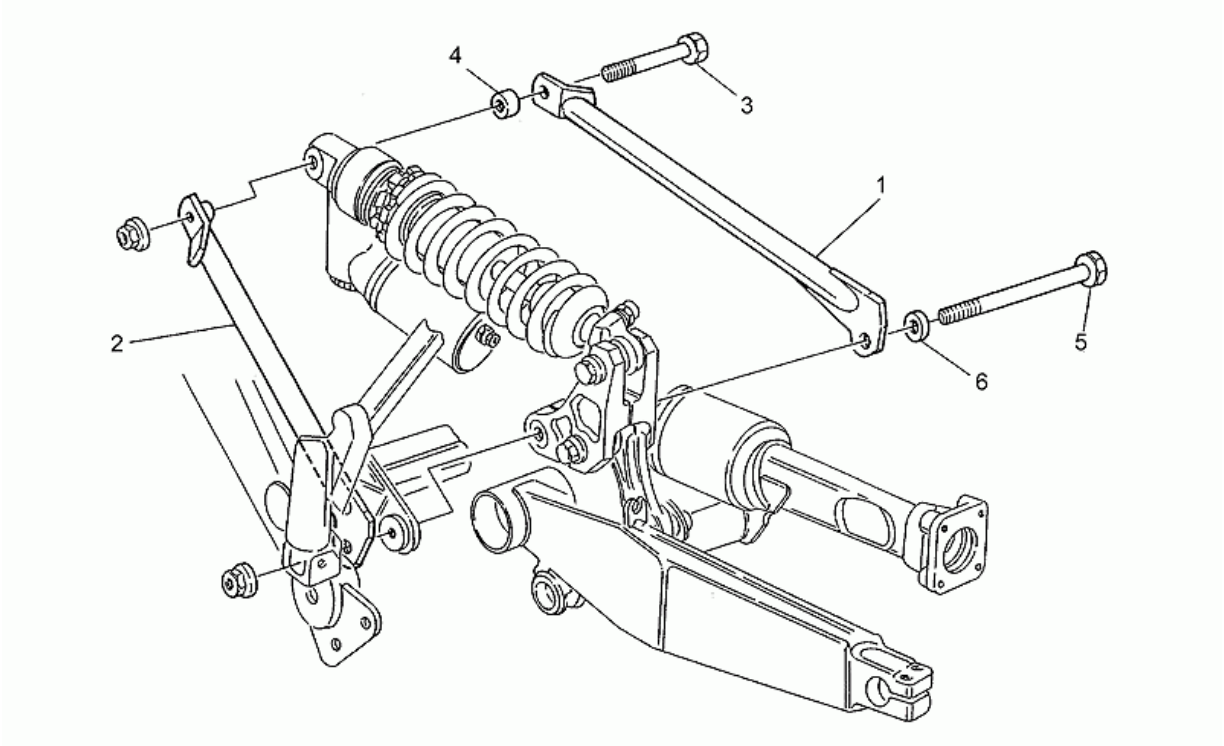

Pos.	Code	Description	Q.ty	Variants
1	GU30561030	RH rod	1	**Technical Specifications:**From frame FB11600[T1]
2	GU30561130	LH rod	1	**Technical Specifications:**From frame FB11600[T1]
3	GU30560730	Screw	1	**Technical Specifications:**From frame FB11600[T1]
4	GU91181018	Spacer	1	**Technical Specifications:**From frame FB11600[T1]
5	GU30560831	Pin	1	**Technical Specifications:**From frame FB11600[T1]
6	GU30560930	Washer	1	**Technical Specifications:**From frame FB11600[T1]

Assembly	FRAME
Code	33.16
Description	Front wheel
Revision	1

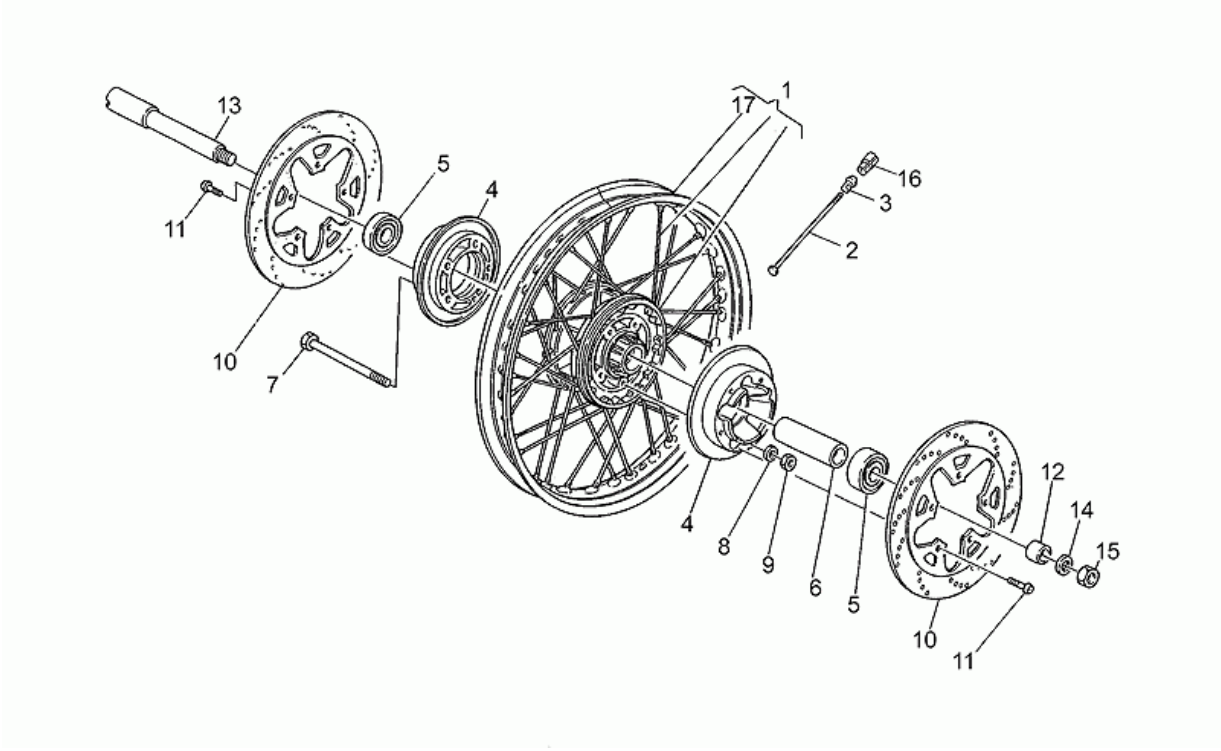

Pos.	Code	Description	Q.ty	Variants
1	GU30610330	Front wheel	1	**Color:**Blank[gr]
1	GU30610331	Front wheel	1	**Color:**Grey[gg]
2	GU30611630	Spoke	36	
3	GU27611710	Nipples	36	
4	GU30620330	Flange	2	**Color:**Blank[gr]
4	GU30620331	Flange	2	**Color:**Grey[gg]
5	GU92204217	Bearing	2	
6	GU39615201	Internal spacer	1	
7	GU98052470	Screw	5	
8	GU14615901	Washer 8,4X13X0,8	5	
9	GU92630508	Nut	5	
10	GU30613331	Front brake disc	2	
11	GU98230825	Screw	10	
12	GU30616330	Spacer	1	
13	GU30614130	Front wheel spindle	1	
14	GU30615830	Washer	1	
15	GU92602316	Nut M6X1,5	1	
16	GU12616101	Counterweight 15 gr.	1	
16	GU12616102	Counterweight 20 gr.	1	
16	GU12616103	Counterweight 30 gr.	1	
17	GU30610830	Front wheel	2	

Assembly	FRAME
Code	33.17
Description	Rear wheel
Revision	1

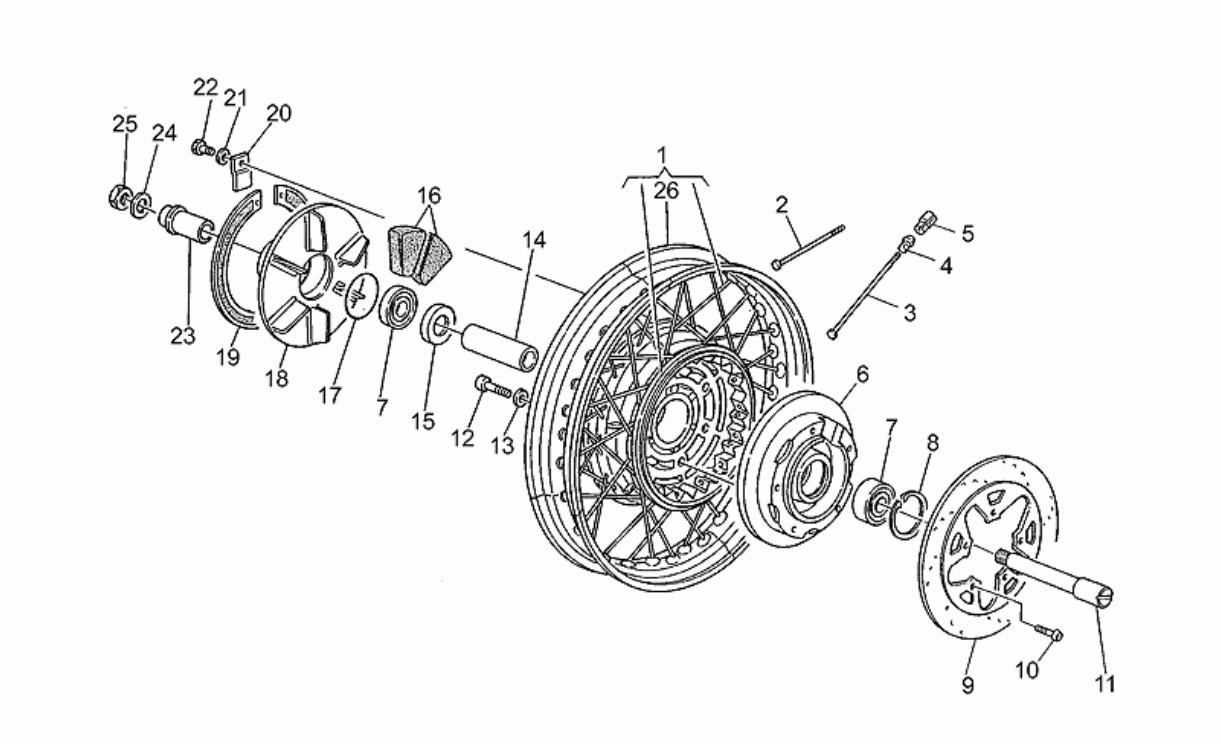

Pos.	Code	Description	Q.ty	Variants
1	GU30630630	Rear wheel	1	**Color:**Blank[gr]
1	GU30630631	Rear wheel	1	**Color:**Grey[gg]
2	GU30631130	Spoke 135 mm	20	
3	GU30631430	Long spoke	20	
4	GU27611710	Nipples	40	
5	GU12616101	Counterweight 15 gr.	1	
5	GU12616102	Counterweight 20 gr.	1	
5	GU12616103	Counterweight 30 gr.	1	
6	GU30632430	Flange	1	**Color:**Blank[gr]
6	GU30632431	Flange	1	**Color:**Grey[gg]
7	GU92204220	Ball bearing 20X47X14	2	
8	GU90272047	Circlip 47X50,5	1	
9	GU30635731	Rear brake disc	1	
10	GU98230825	Screw	5	
11	GU28633300	Rear wheel spindle	1	
12	GU98622430	Screw M8X30	6	
13	GU14615901	Washer 8,4X13X0,8	6	
14	GU14634051	Spacer	1	
15	GU17633550	Cup	1	
16	GU01336800	Rubber cush drive hub	12	
17	GU90706490	O-ring	1	
18	GU14335203	Flexible coupling disc	1	
19	GU14335303	Snap ring	1	
20	GU17335950	Plate	1	
21	GU95021106	Notched washer	1	
22	GU98054312	Screw	1	
23	GU17634150	Spacer	1	
24	GU14634400	Washer	1	

Assembly	FRAME
Code	33.17
Description	Rear wheel
Revision	1

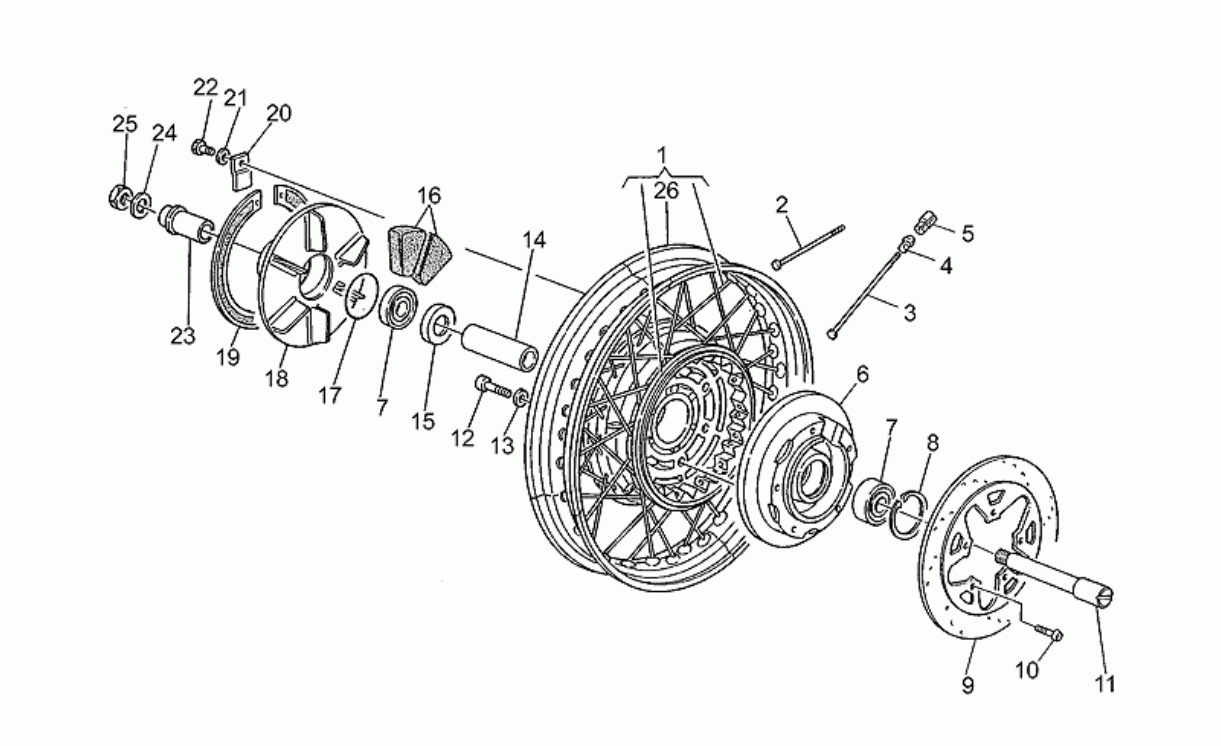

Pos.	Code	Description	Q.ty	Variants
25	GU92602316	Nut M6X1,5	1	
26	GU30630730	Rear wheel	1	

Assembly	FRAME
Code	33.18
Description	Fuel tank-seat
Revision	1

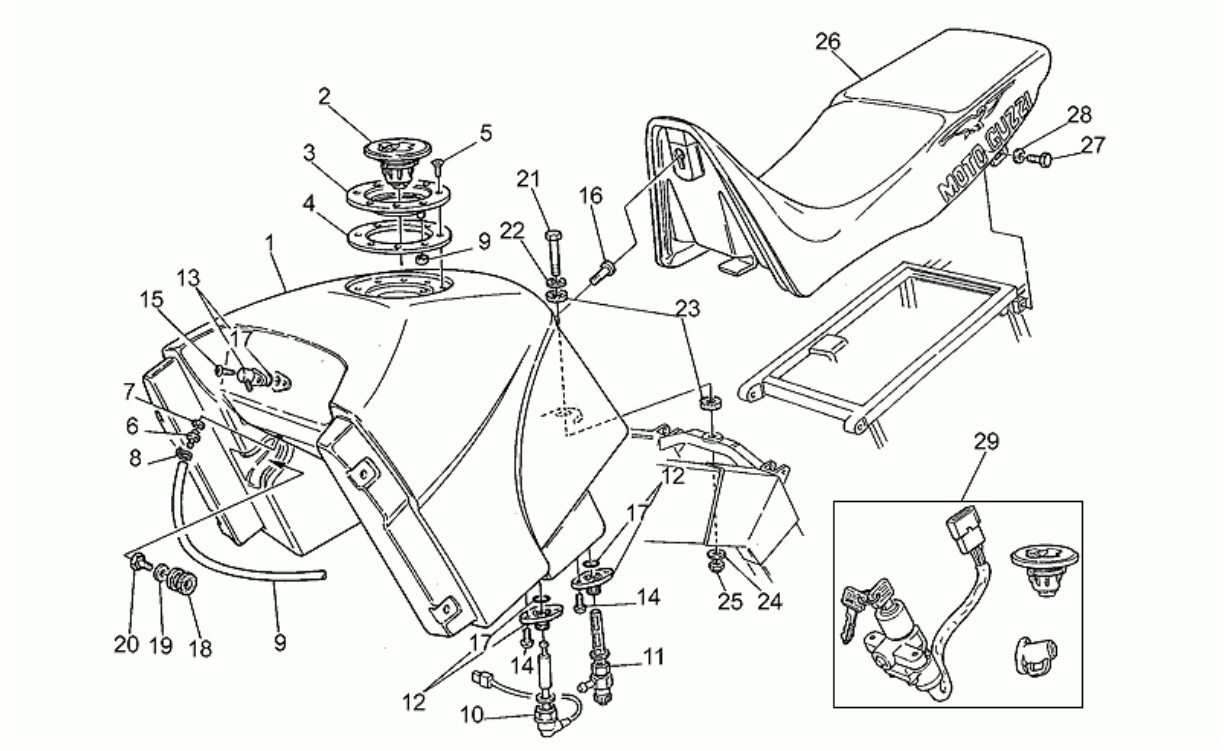

Pos.	Code	Description	Q.ty	Variants
1	GU301002301	Fuel tank	1	**Color:**Blank[gr]
1	GU30100231	Fuel tank	1	**Color:**Metallized blue 227[m.b]
1	GU30100232	Fuel tank	1	**Color:**Amaranth metallized 151[m.a]
1	GU30100233	Fuel tank	1	**Color:**Red 107[r.]
1	GU89000053	Fuel tank	1	**Color:** Black 532[b.] **Technical Specifications:**See spare parts comm.n.010 of 1997[01097N]
2	GU30104100	Fuel filler cap	1	
3	GU30102300	Ring nut	1	
4	GU30101700	Gasket	1	
5	GU98250512	Screw	8	
6	GU30103730	Union	1	
7	GU30104630	Gasket	1	
8	GU61108500	Hose clamp D9	1	
9	GU00823944050	Pipe 5X9	1	
10	GU30103030	Fuel level sensor	1	
11	GU29105460	Fuel cock	2	
12	GU30101830	Ring nut	3	
13	GU30101730	Tank plug flange	1	
14	GU98230510	Hex socket screw M5x10	6	
15	GU98230612	Screw	2	
16	GU30103230	Screw	1	
17	GU90706115	O-ring	4	
18	GU91551166	Rubber spacer	2	
19	GU95100256	Washer	2	
20	GU98054416	Hex screw M8X16	2	
21	GU98052350	Screw	1	
22	GU95100141	Washer 6,4x12x1,2	1	

Assembly	FRAME
Code	33.18
Description	Fuel tank-seat
Revision	1

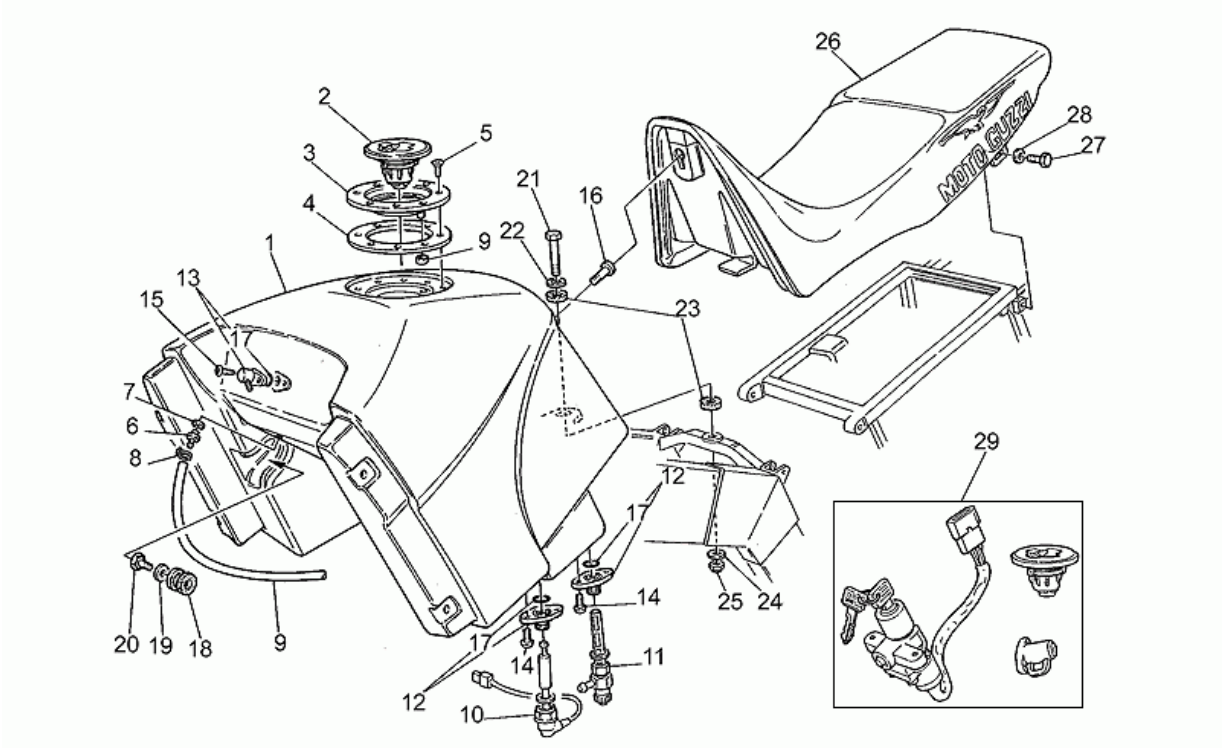

Pos.	Code	Description	Q.ty	Variants
23	GU93110082	Rubber spacer	2	
24	GU95000206	Washer	1	
25	GU92630106	Nut M6x1	1	
26	GU30460530	Saddle	1	
27	GU98054416	Hex screw M8X16	2	
28	GU95004206	Washer 6,15x11x0,8	2	
29	GU30736830	Lock hardware kit	1	

Assembly	FRAME
Code	33.19
Description	Frame
Revision	1

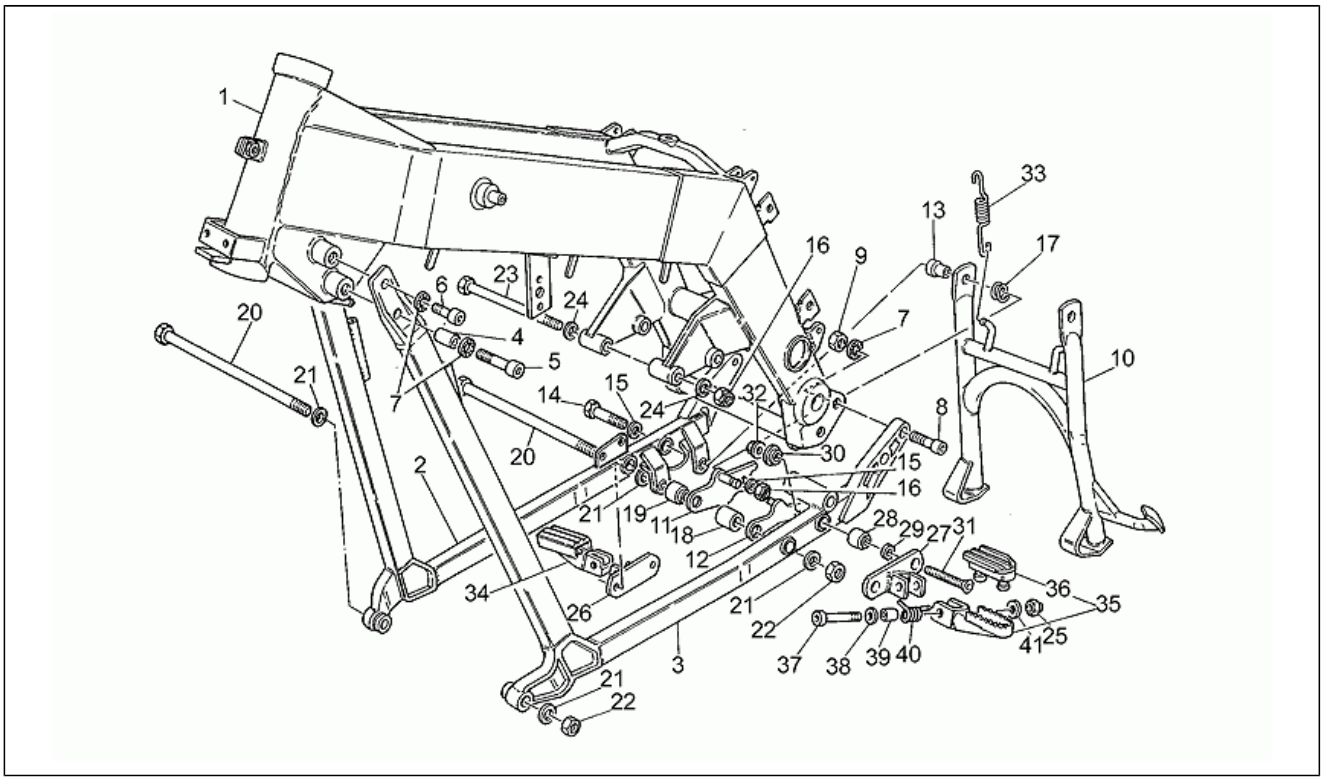

Pos.	Code	Description	Q.ty	Variants
1	GU30400130	Frame	1	
2	GU30420330	RH cradle, grey	1	
3	GU30422130	LH cradle, grey	1	
4	GU91181023	Spacer	2	
5	GU98610550	Screw	2	
6	GU98610530	Screw	2	
7	GU95129240	Washer	8	
8	GU98613625	Screw	4	
9	GU92601312	Nut	4	
10	GU30430330	Central stand	1	
11	GU14432900	RH plate	1	
12	GU14433200	LH plate	1	
13	GU30252030	Spacer	2	
14	GU98052555	Screw	2	
15	GU95129180	Washer 10,5X18X0,8	4	
16	GU92630110	Nut M10X1,5	4	
17	GU94322215	Spring	2	
18	GU14429800	Spacer	2	
19	GU30433530	Spacer	2	
20	GU30429530	Pin	2	
21	GU95000213	Washer	4	
22	GU92602312	Nut	2	
23	GU30429630	Pin	2	
24	GU95004210	Washer 10,2x18x2	4	
25	GU92630108	Nut	2	
26	GU30443530	RH foot rest support	1	
27	GU30446030	LH footrest support	1	
28	GU93202208	Silent-block	4	

Assembly	FRAME
Code	33.19
Description	Frame
Revision	1

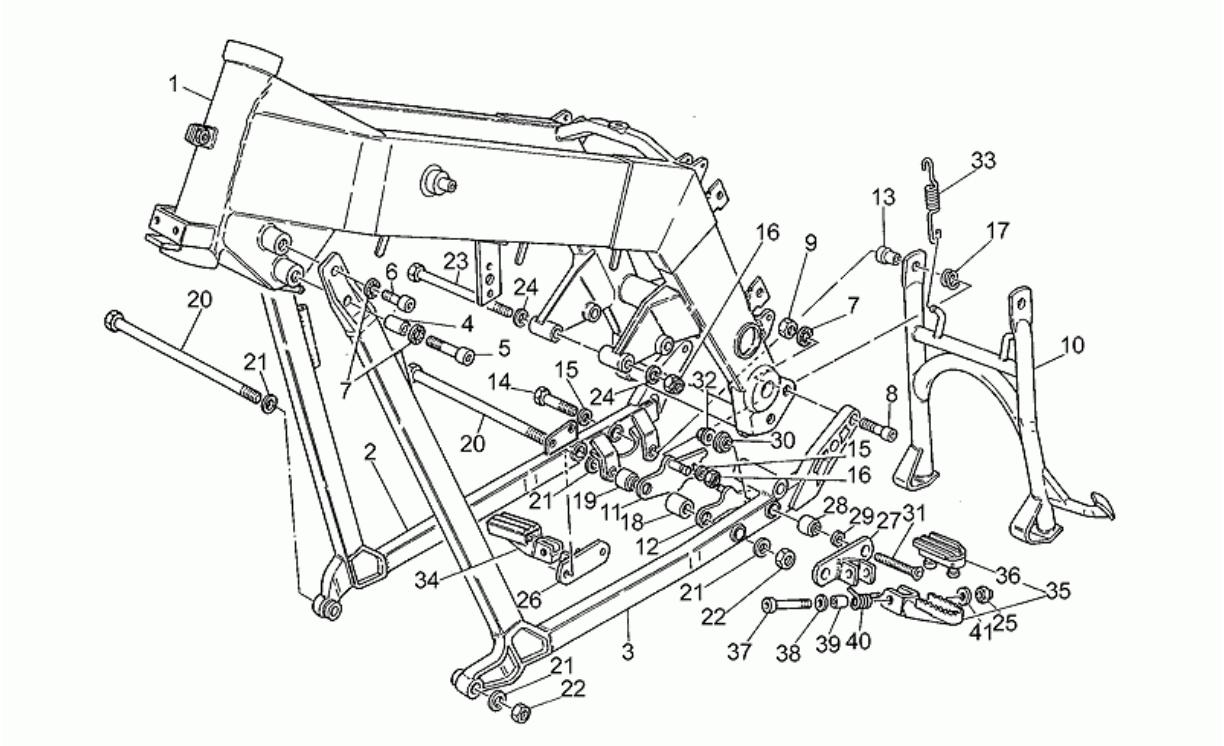

Pos.	Code	Description	Q.ty	Variants
29	GU30427030	Spacer	4	
30	GU30424230	Ring nut	4	
31	GU98250850	Screw	4	
32	GU92630508	Nut	4	
33	GU12434001	Lateral stand spring	2	
34	GU27440210	RH Foot rests	1	
35	GU27441310	LH Foot rests	1	
36	GU27443210	Footrest rubber	1	
37	GU98820445	Screw	2	
38	GU14615901	Washer 8,4X13X0,8	4	
39	GU91180817	Spacer	2	
40	GU27441110	Spring	2	
41	GU95004208	Washer	2	

Assembly	FRAME
Code	33.20
Description	Rear frame
Revision	1

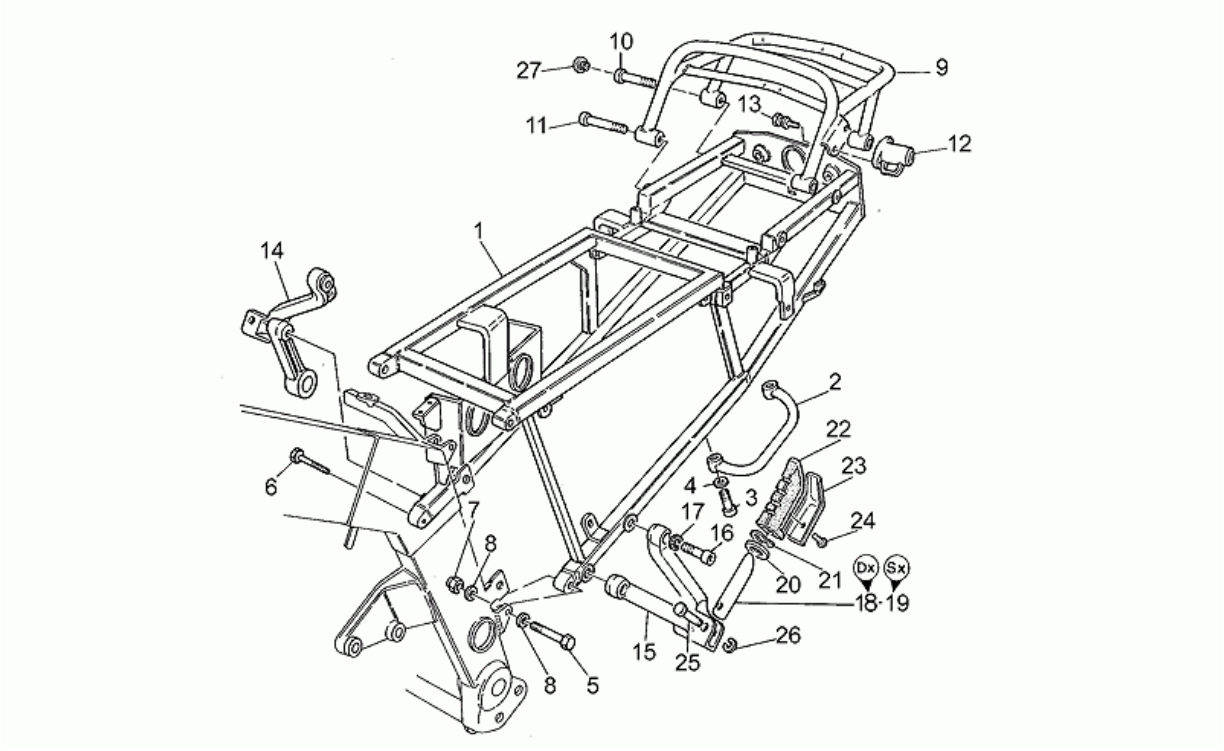

Pos.	Code	Description	Q.ty	Variants
1	GU30425630	Rear frame	1	
2	GU30464330	Battery handle	1	
3	GU98612425	Screw	2	
4	GU14615901	Washer 8,4X13X0,8	2	
5	GU98052440	Screw	3	
6	GU98052445	Screw	1	
7	GU92660008	Nut	4	
8	GU95000208	Washer	8	
9	GU30466530	Luggage rack	1	
10	GU98820440	Screw	2	
11	GU98800445	Screw	2	
12	GU66466815	Helmet lock	1	
13	GU66468115	Shear rivet	2	
14	GU30444630	RH footrest support	1	**Color:**Blank[gr]
14	GU30444631	RH footrest support, grey	1	**Color:**Grey[gg]
15	GU30444730	LH footrest support	1	**Color:**Blank[gr]
15	GU30444731	LH footrest support, grey	1	**Color:**Grey[gg]
16	GU98622430	Screw M8X30	4	
17	GU14615901	Washer 8,4X13X0,8	4	
18	GU66440730	RH front foot rest pipe	1	
19	GU66441830	LH front foot rest pipe	1	
20	GU66441630	Spacer	2	
21	GU51609800	Spring washer	2	
22	GU66443230	Foot rest	2	
23	GU31441260	Plate	2	
24	GU98290408	Screw	4	
25	GU30440630	Footrest pin	2	
26	GU90280006	Stop ring	2	

Assembly	FRAME
Code	33.20
Description	Rear frame
Revision	1

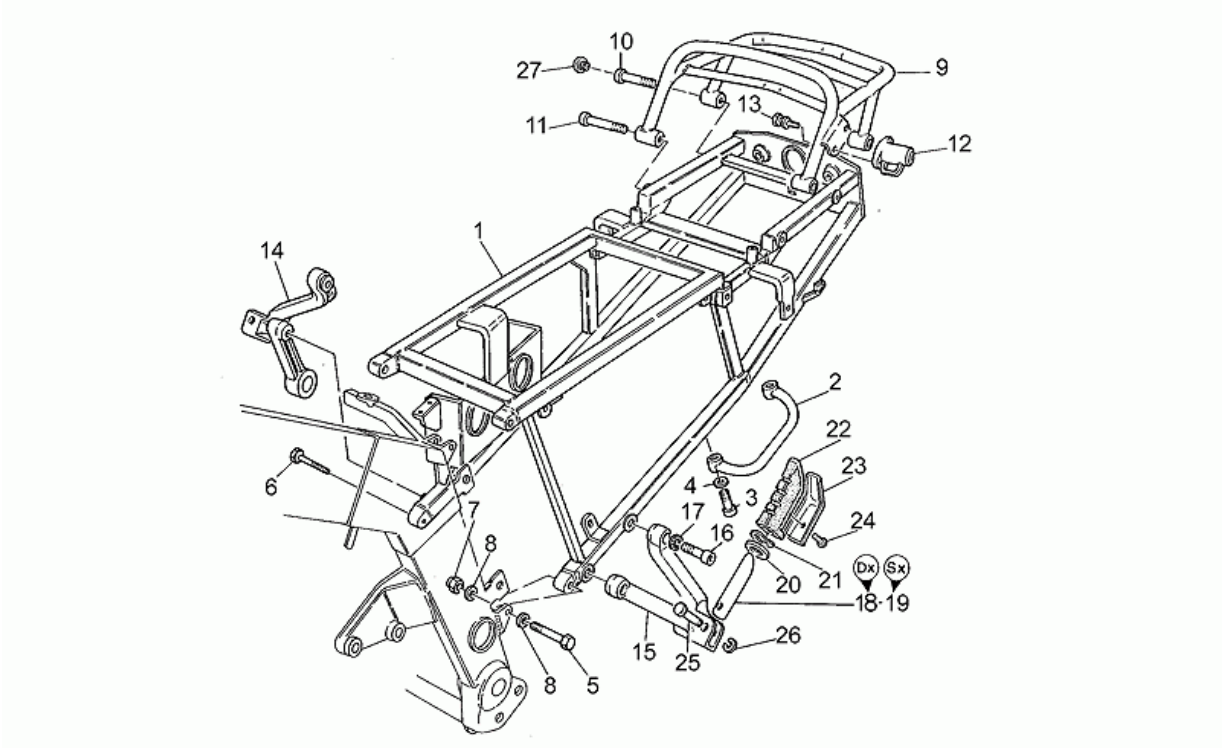

Pos.	Code	Description	Q.ty	Variants
27	GU30943400	Plug	4	

Assembly	FRAME
Code	33.23
Description	Fuel supply
Revision	1

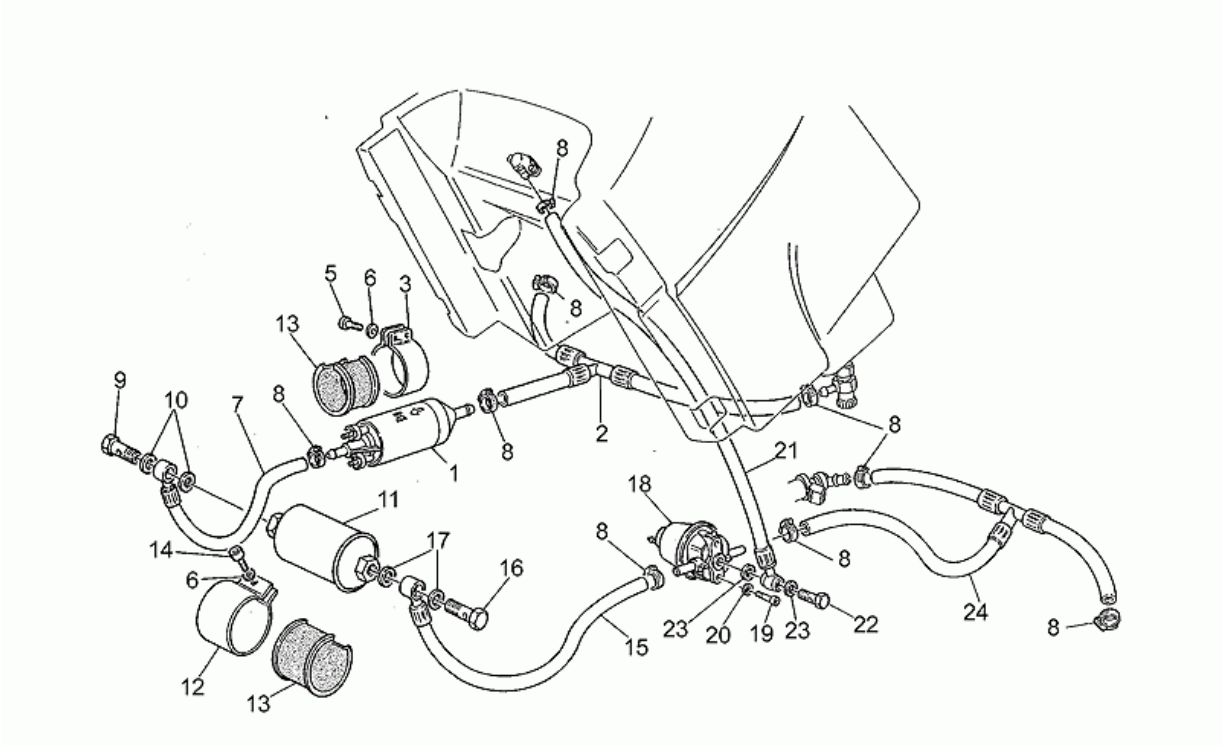

Pos.	Code	Description	Q.ty	Variants
1	GU29107261	Fuel pump	1	
2	GU30106530	Pipe	1	
3	GU29107360	Hose clamp	1	
5	GU98622312	Screw	2	
6	GU61013800	Special washer	3	
7	GU30106130	Pipe from p“ump to filter	1	
8	GU93305017	Hose clamp	8	
9	GU29109160	Bored screw M14	1	
10	GU30109331	Gasket	2	
11	GU29106061	Fuel filter M14xM12	1	
12	GU29113860	Hose clamp	1	
13	GU29105860	Rubber protection	2	
14	GU98612320	Screw	1	
15	GU30108230	Pipe	1	
16	GU29109161	Special screw M12	1	
17	GU12006400	Gasket 12,25	2	
18	GU29112760	Fuel pressure regulator	1	
19	GU98612312	Screw	2	
20	GU95100119	Washer 6,25X11X1	2	
21	GU30108731	Pipe	1	
22	GU30107930	Bored screw	1	
23	GU30109230	Gasket	2	
24	GU30108030	Pipe	1	

Assembly	FRAME
Code	33.26
Description	Electronic control unit
Revision	1

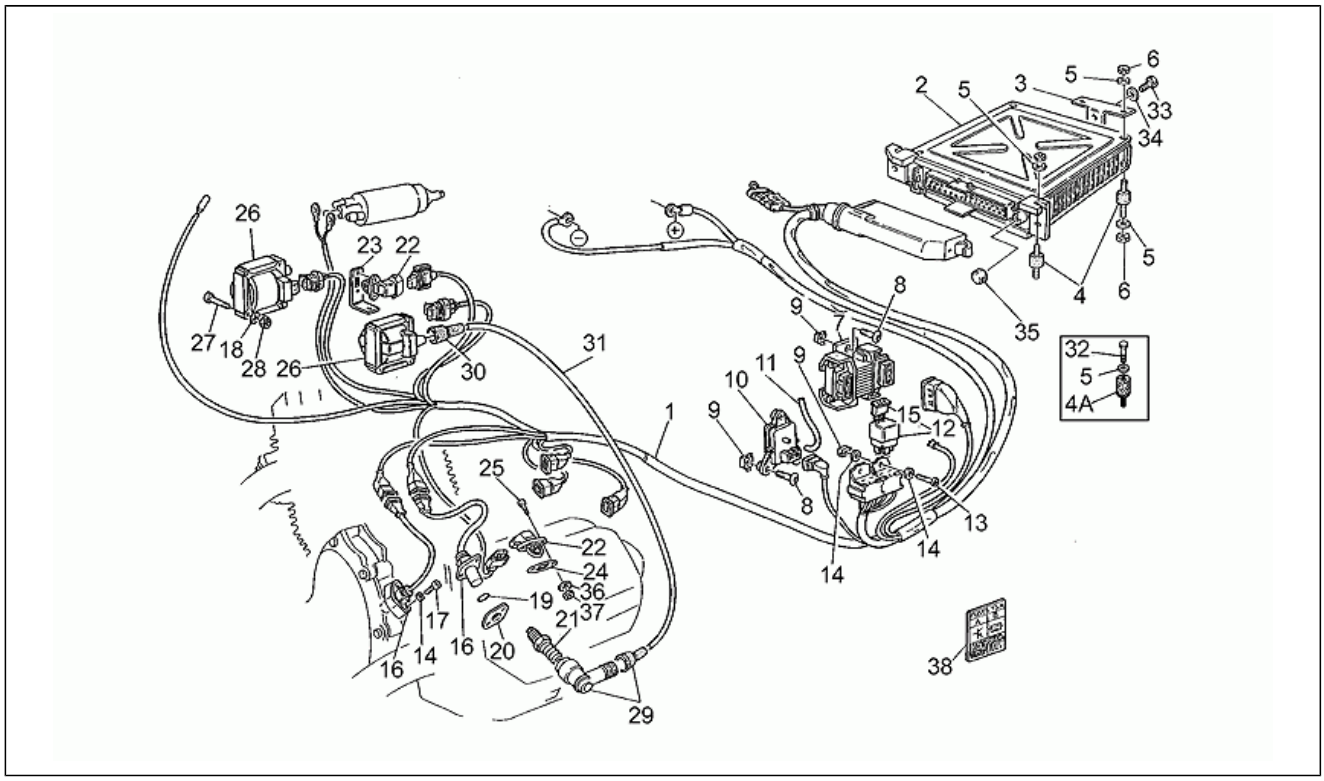

Pos.	Code	Description	Q.ty	Variants
1	GU30725830	Injection wiring	1	
2	GU30729531	Electronic control unit	1	
3	GU30723830	Clamp	1	
4	GU93211315	Silent-block	4	**Technical Specifications:**First series[1A]
4	GU93221315	Block	4	**Technical Specifications:**Second series[2A]
5	GU95100064	Washer	6	
6	GU92630104	Nut M4x0,7	6	
7	GU29724460	Power modules	1	
8	GU98230616	Screw	5	
9	GU92660601	Captive nut	7	
10	GU29727061	Pressure sensor	1	
11	GU00823946060	Breather pipe	1	
13	GU98202516	Screw	2	
14	GU95004205	Washer	8	
15	GU28742560	Fuse 15A	2	
16	GU29721660	Timing and rev sensor	2	
17	GU98622210	Hex socket screw M5X10	4	
18	GU95004204	Washer	4	
19	GU90706141	O-ring	2	
20	GU29722760	Gasket 0,5 mm	2	
21	GU29717060	Spark plug BOSCH W5DC	2	
21	GU30717031	Spark plug	2	
22	GU30729331	Air temp. Sensor	2	
23	GU30728230	Sensor support	1	
24	GU30027931	Gasket	1	
25	GU98610110	Screw	4	
26	GU30716500	HT coil	2	
27	GU98620130	Screw	4	

Assembly	FRAME
Code	33.26
Description	Electronic control unit
Revision	1

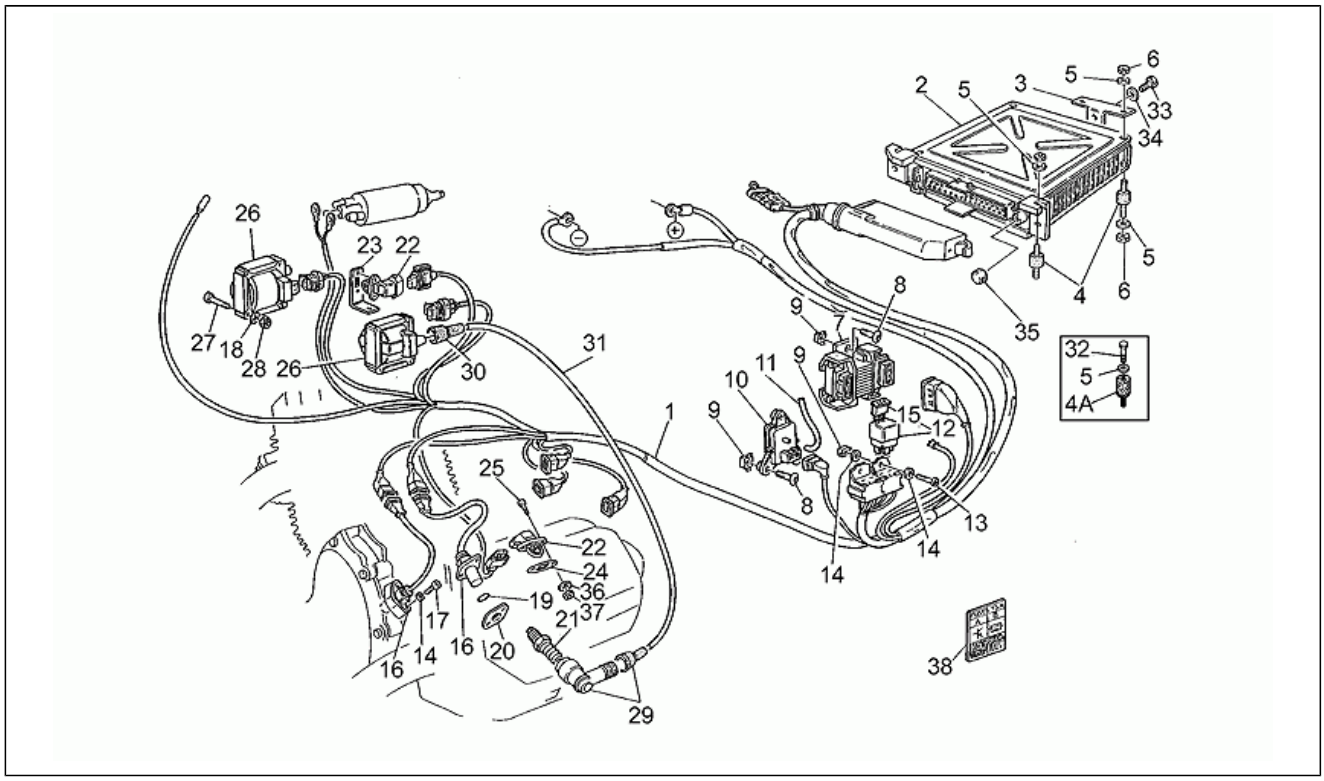

Pos.	Code	Description	Q.ty	Variants
28	GU92630104	Nut M4x0,7	4	
29	GU30717410	Sparkplug cap NGK	2	
30	GU14717600	Cap	2	
31	GU17718350	HT cable	2	
32	GU98054116	Screw	1	
33	GU98054210	Screw	1	
34	GU29217960	Washer 5,9X3X0,8	1	
35	GU29729762	Tamper-proof plug	1	
36	GU95120032	Washer	4	
37	GU92601003	Nut	2	
38	GU30944700	Sticker "schema fusibili"	1	

Assembly	FRAME
Code	33.31
Description	Exhaust unit
Revision	1

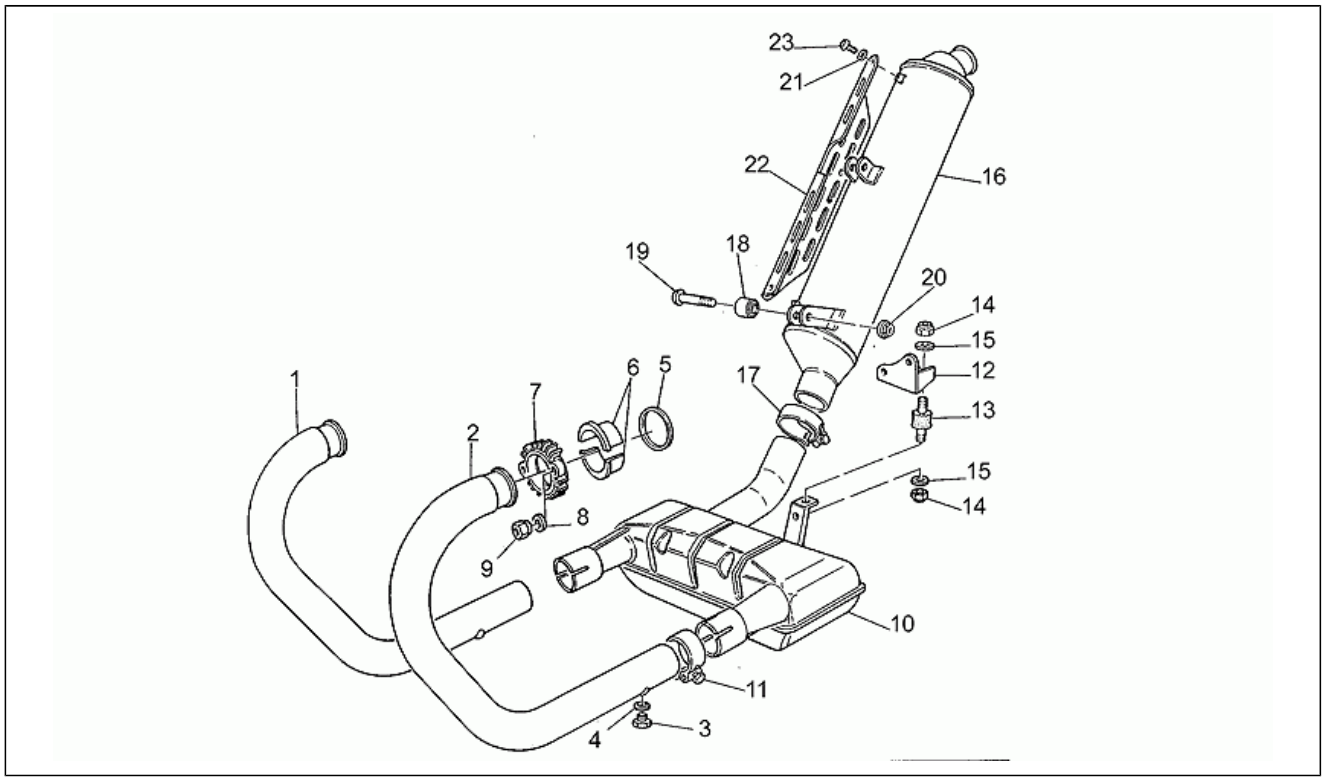

Pos.	Code	Description	Q.ty	Variants
1	GU30120930	RH exhaust manifold	1	
2	GU30120931	LH exhaust manifold	1	
3	GU98110007	Plug	2	
4	GU30109330	Gasket	2	
5	GU90718370	Gasket	2	
6	GU30121230	Spacer	4	
7	GU30121030	Flange	2	
8	GU14615901	Washer 8,4X13X0,8	4	
9	GU92750085	Nut	4	
10	GU30123930	Expansion chamber	1	
11	GU30123400	Hose clamp	2	
12	GU30123830	Plate	1	
13	GU93212520	Silent-block	1	
14	GU92660208	Nut	2	
15	GU95100223	Washer	2	
16	GU30123030	Silencer	1	
17	GU30126930	Hose clamp	1	
18	GU93202208	Silent-block	2	
19	GU98230840	Screw	1	
20	GU92660008	Nut	1	
21	GU61013800	Special washer	3	
22	GU30121930	Silencer protection	1	
23	GU98230612	Screw	3	

Assembly	FRAME
Code	33.33
Description	Gear lever
Revision	1

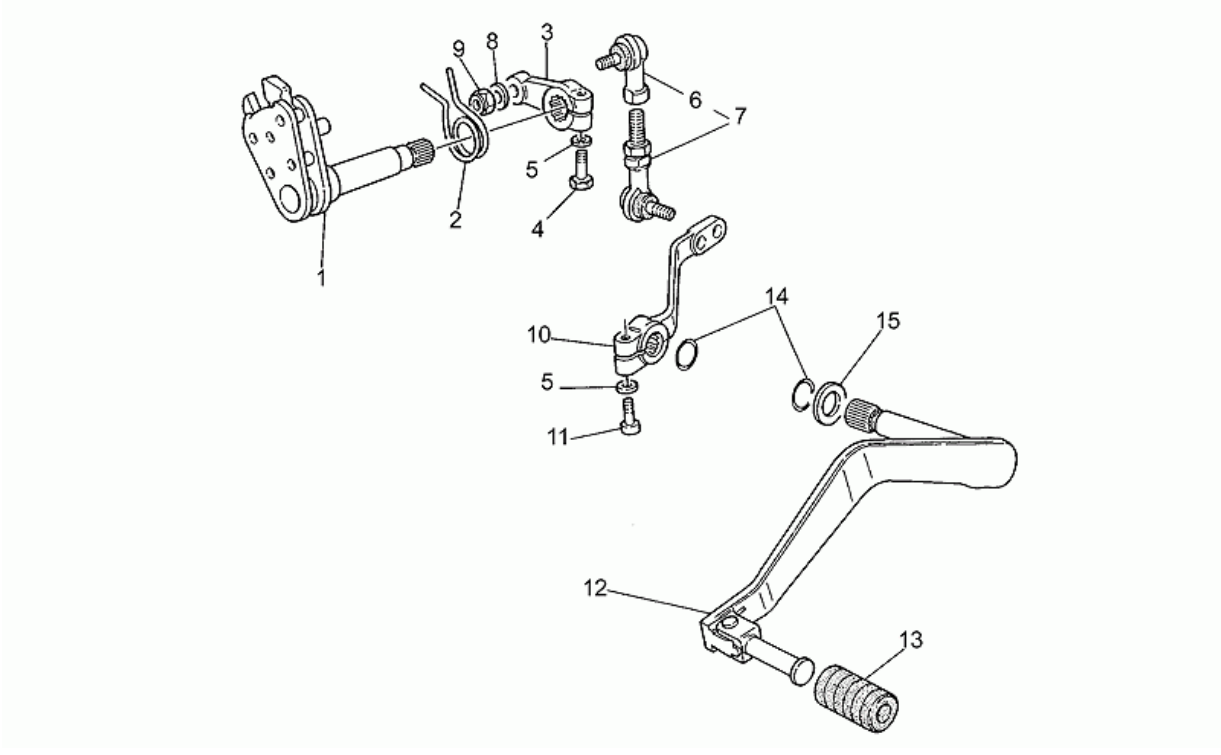

Pos.	Code	Description	Q.ty	Variants
1	GU28236260	Preselection complete	1	
2	GU28238261	Spring	1	
3	GU19258220	Shift lever	1	
4	GU98052325	Screw	1	
5	GU95021106	Notched washer	2	
6	GU28258160	Fork	2	
7	GU30257730	Change gear tie rod compl.	1	
8	GU95000206	Washer	2	
9	GU92630106	Nut M6x1	2	
10	GU30256930	Gearbox connecting rod	1	
11	GU98622325	Hex socket screw M6X25	1	
12	GU30250830	Complete gearchange lever cromo	1	
12	GU30250832	Complete gearchange lever	1	
13	GU27251015	Rubber spacer	1	
14	GU90706141	O-ring	2	
15	GU30252930	Spacer	1	

Assembly	ENGINE
Code	34.21
Description	Drive shaft
Revision	1

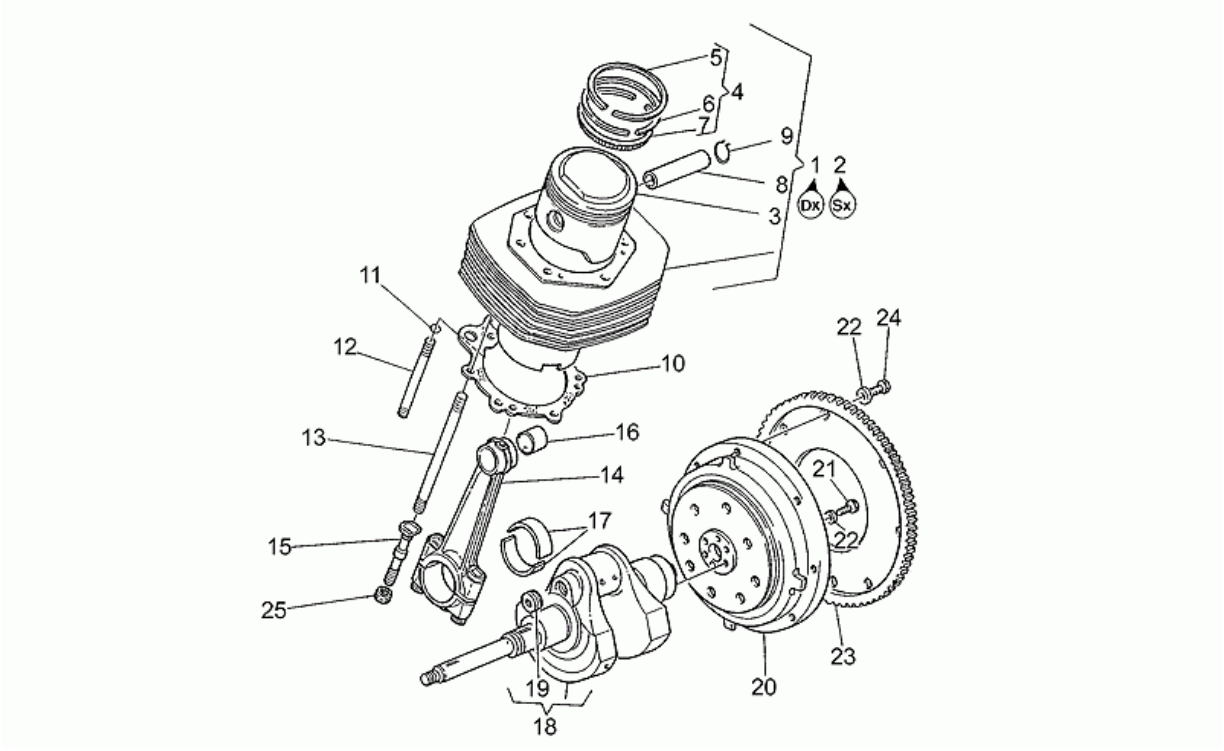

Pos.	Code	Description	Q.ty	Variants
1	GU30060085	Cylinder with piston assy., RH	1	**Color:**Grey[gg]
1	GU30060110	Cylinder with piston assy., RH	1	**Color:**Blank[gr]
2	GU30060111	Cylinder with piston assy., LH	1	**Color:**Blank[gr]
2	GU30060185	Cylinder with piston assy., LH	1	**Color:**Grey[gg]
3	GU30060410	Piston	2	
4	GU18060601	Piston rings set	2	
5	GU14060760	Piston ring	2	
6	GU18060950	Piston ring	2	
7	GU14061060	Oil scraper ring	2	
8	GU28061260	Piston pin	2	
9	GU27061385	Stop ring	4	
10	GU14020865	Gasket	2	
11	GU90706094	O-ring 9x2	4	
12	GU12021800	Stud bolt	4	
13	GU12021700	Stud bolt	8	
14	GU30061500	Connecting rod	2	
15	GU30062260	Screw	4	
16	GU91112128	Bush	2	
17	GU30062000	Bearing half-shell	4	**Technical Specifications:**Tolerance standard[std]
17	GU30062001	Bearing half-shell 0,254 mm	4	**Technical Specifications:**Tolerance min. 0,254mm[MM1]
17	GU30062002	Bearing half-shell 0,508 mm	4	**Technical Specifications:**Tolerance min. 0,508mm[MM2]
17	GU30062003	Bearing half-shell 0,762 mm	4	**Technical Specifications:**Tolerance min. 0,762mm[MM3]
18	GU29064161	Drive shaft	1	
19	GU12065400	Plug	1	
20	GU29067060	Flywheel cpl.	1	
21	GU12067701	Screw M8X25	6	
22	GU14615901	Washer 8,4X13X0,8	14	
23	GU17067900	Chain ring	1	

Assembly	ENGINE
Code	34.21
Description	Drive shaft
Revision	1

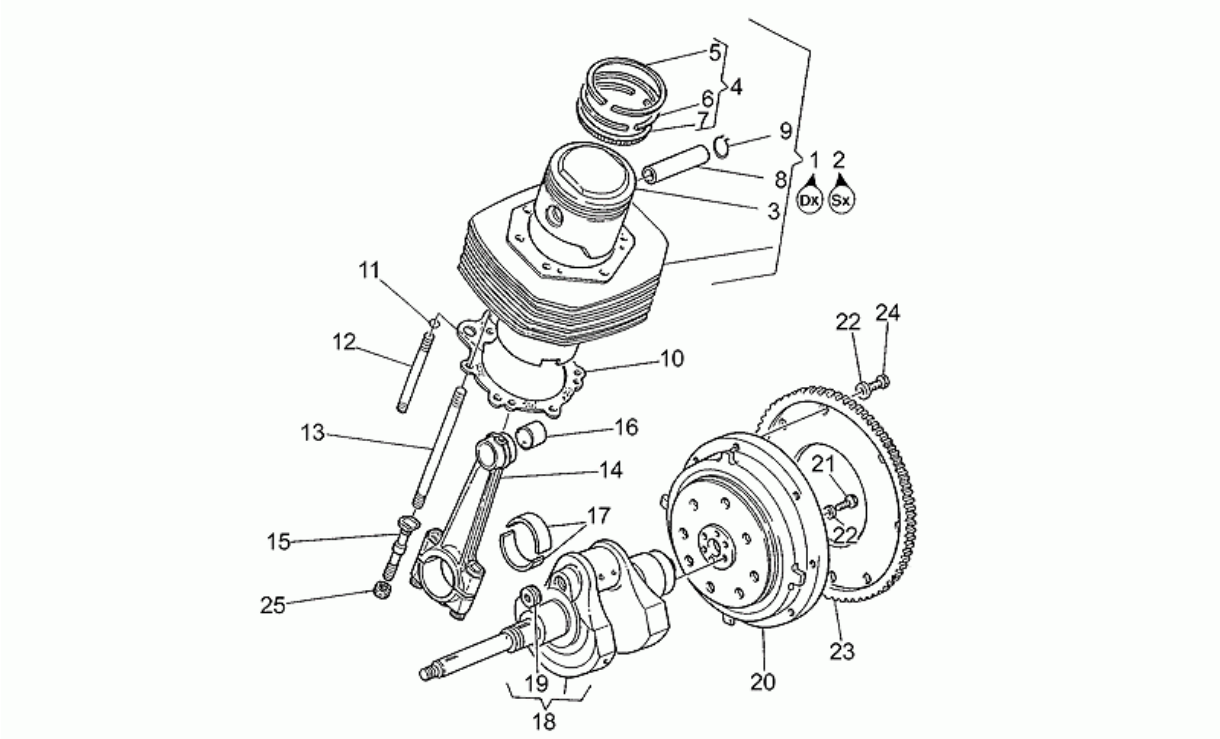

Pos.	Code	Description	Q.ty	Variants
24	GU98054420	Hex screw M8X20	8	
25	GU92731090	Self-locking nut	4	

Assembly	ENGINE
Code	34.22
Description	Driven shaft
Revision	1

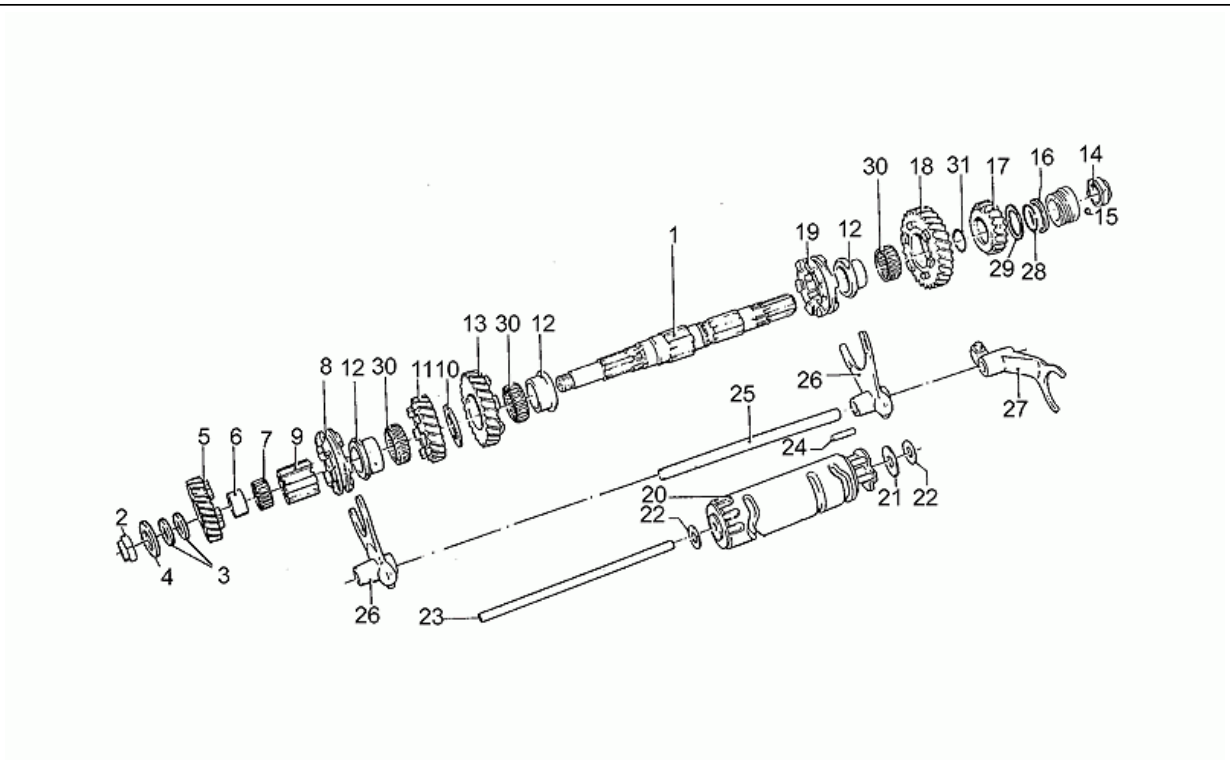

Pos.	Code	Description	Q.ty	Variants
1	GU14213612	Driven shaft	1	
2	GU14217410	Nut	1	
3	GU43083810	Shim 17,25x27x0,5	0	
4	GU14215400	Clearance washer 17,1x30	1	
5	GU14215110	Gear 4a Z=20	1	
6	GU92259017	Ring 4a	1	
7	GU92251022	Roller cage 4a A.S.	1	
8	GU14231012	Sliding sleeve 3a-4a	1	
9	GU14232512	Hose	1	
10	GU14218011	Washer 25x40x3	1	
11	GU14214810	Gear 3a Z=22	1	
12	GU14213001	Bush 1a-2a-3a AS	3	
13	GU14214510	Gear 2a Z=25	1	
14	GU14219310	Nut	1	
15	GU92295702	Ball	1	
16	GU14217300	Washer 22,1x32x2	1	
17	GU14215213	Gear 5a AS Z=21	1	
18	GU14214210	Gear 1a Z=28	1	
19	GU14230711	Sliding sleeve 1a-2a	1	
20	GU14234405	Shift cam	1	
21	GU14235500	Washer 8,2x28x1	1	
22	GU55235000	Shim 0,6 mm	3	
22	GU55235001	Shim 0,8 mm	3	
22	GU55235002	Shim 1 mm	3	
22	GU55235003	Shim 1,2 mm	3	
23	GU14234300	Rod	1	
24	GU14234600	Pin	4	
25	GU14232400	Rod	1	

Assembly	ENGINE
Code	34.22
Description	Driven shaft
Revision	1

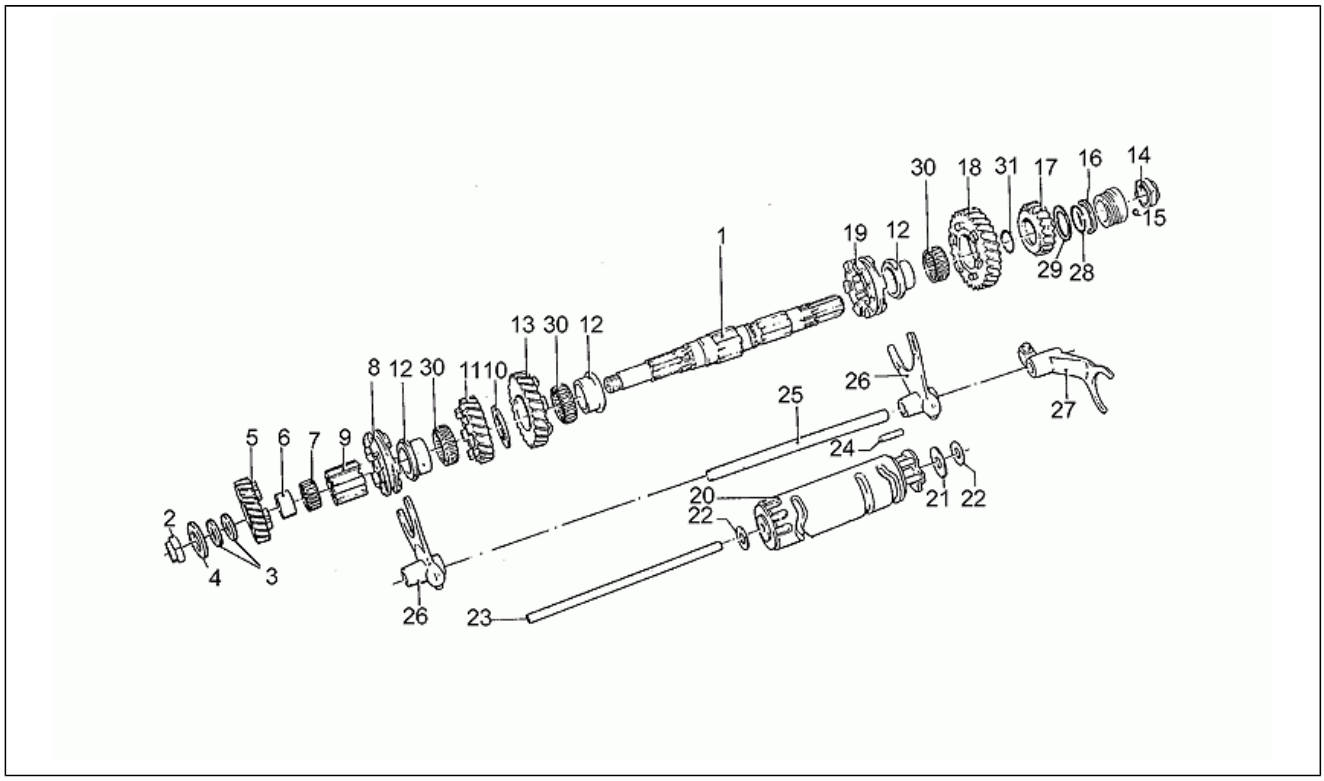

Pos.	Code	Description	Q.ty	Variants
26	GU14230501	Fork 1a-2a-3a-4a	2	
27	GU14231201	Fork 5a	1	
28	GU90706219	O-ring 21,95x1,78	1	
29	GU28217350	Washer	1	
30	GU92251030	Roller cage 30x35x13	3	
31	GU90706203	O-ring 20,24X2,62	1	

Assembly	ENGINE
Code	34.24
Description	Gear box
Revision	1

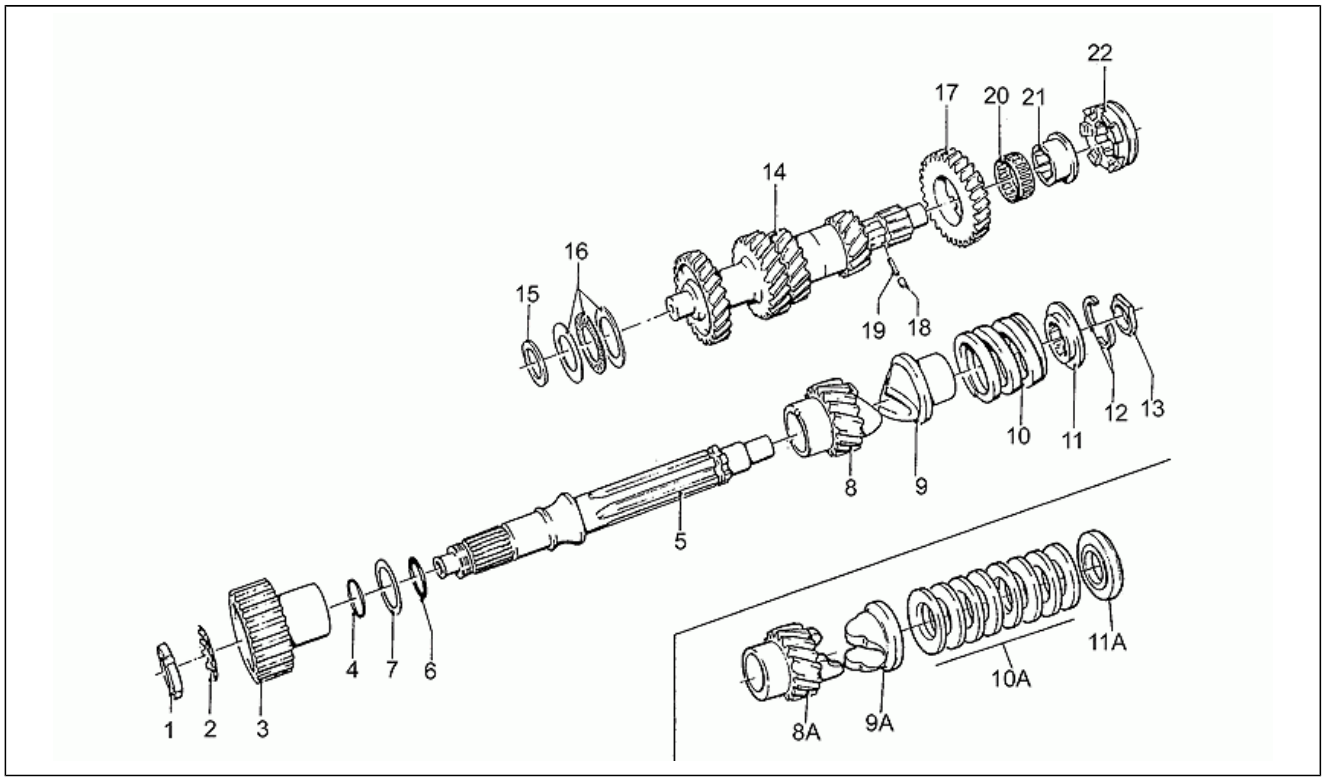

Pos.	Code	Description	Q.ty	Variants
1	GU93601022	Ring nut	1	
2	GU95028022	Washer 22x20x3,9	1	
3	GU30081810	Clutch gear	1	
4	GU90706235	O-ring 23,52x1,78	1	
5	GU14210702	Clutch shaft	1	
6	GU90706203	O-ring 20,24X2,62	1	
7	GU14218401	Oil-spreading washer 25,1x36x0,5	1	
8	GU14211110	Gear Z=17	1	**Technical Specifications:**First series[1A]
8	GU30211160	Idle gear Z=17	1	**Technical Specifications:**Belleville spring[TZ]
9	GU14211201	Hose	1	**Technical Specifications:**First series[1A]
9	GU30211260	Hose	1	**Technical Specifications:**Belleville spring[TZ]
10	GU13211500	Belleville spring	1	**Technical Specifications:**First series[1A]
10	GU30211560	Belleville spring	1	**Technical Specifications:**Second series[2A]
11	GU14211600	Disc	1	**Technical Specifications:**First series[1A]
11	GU30211660	Disc	1	**Technical Specifications:**Belleville spring[TZ]
12	GU12211700	Half ring	2	
13	GU14219401	Spacer	1	
14	GU14210513	Primary gear shaft	1	
15	GU18211050	Thrust washer sp.2	1	
15	GU18211051	Thrust washer sp.2,1	1	
15	GU18211052	Thrust washer sp.2,2	1	
15	GU18211054	Thrust washer sp.2,4	1	
16	GU92258525	Roller bearing	1	
17	GU14212013	Gear 5a Z=28	1	
18	GU92296750	Roller	1	
19	GU94321051	Spring	1	
20	GU92251030	Roller cage 30x35x13	1	
21	GU14212210	Bush 5a AP	1	

Assembly	ENGINE
Code	34.24
Description	Gear box
Revision	1

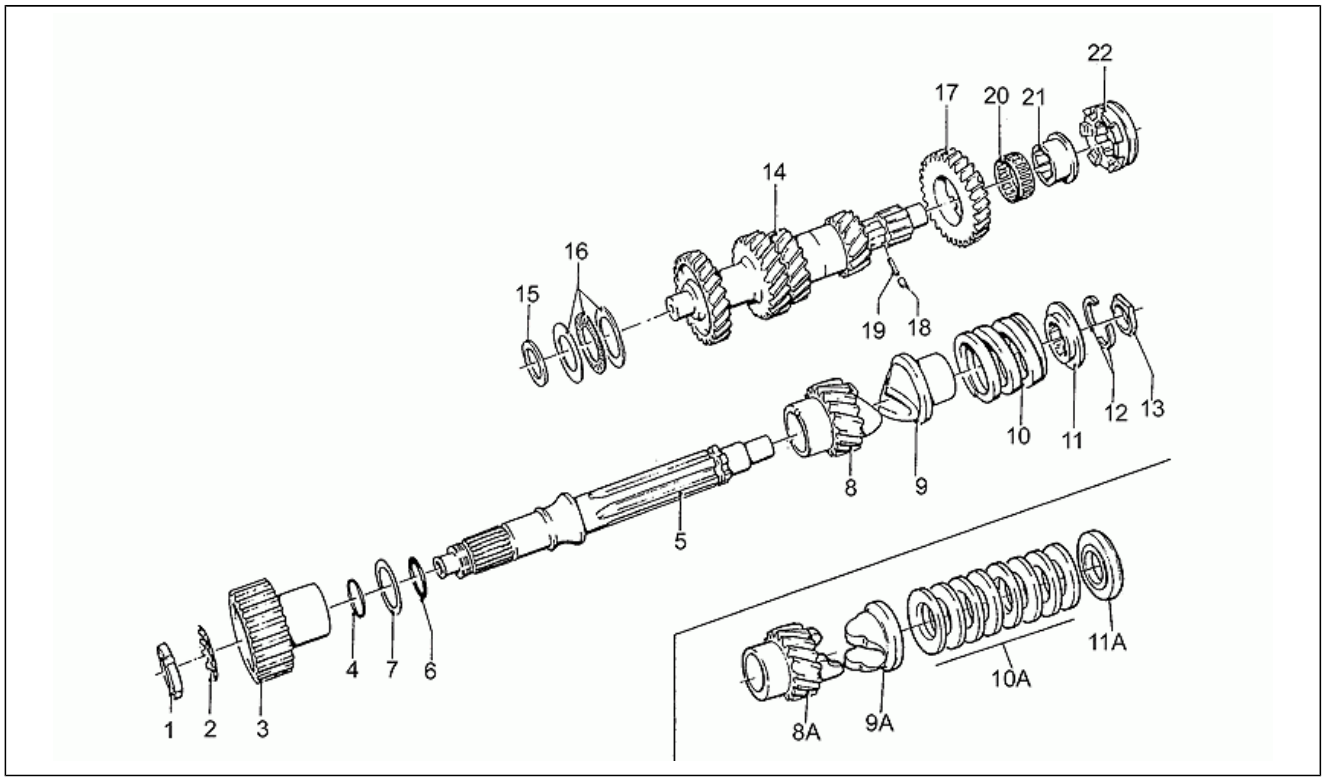

Pos.	Code	Description	Q.ty	Variants
22	GU14231510	Sliding sleeve 5a	1	

Assembly	ENGINE
Code	34.25
Description	Crankcase
Revision	1

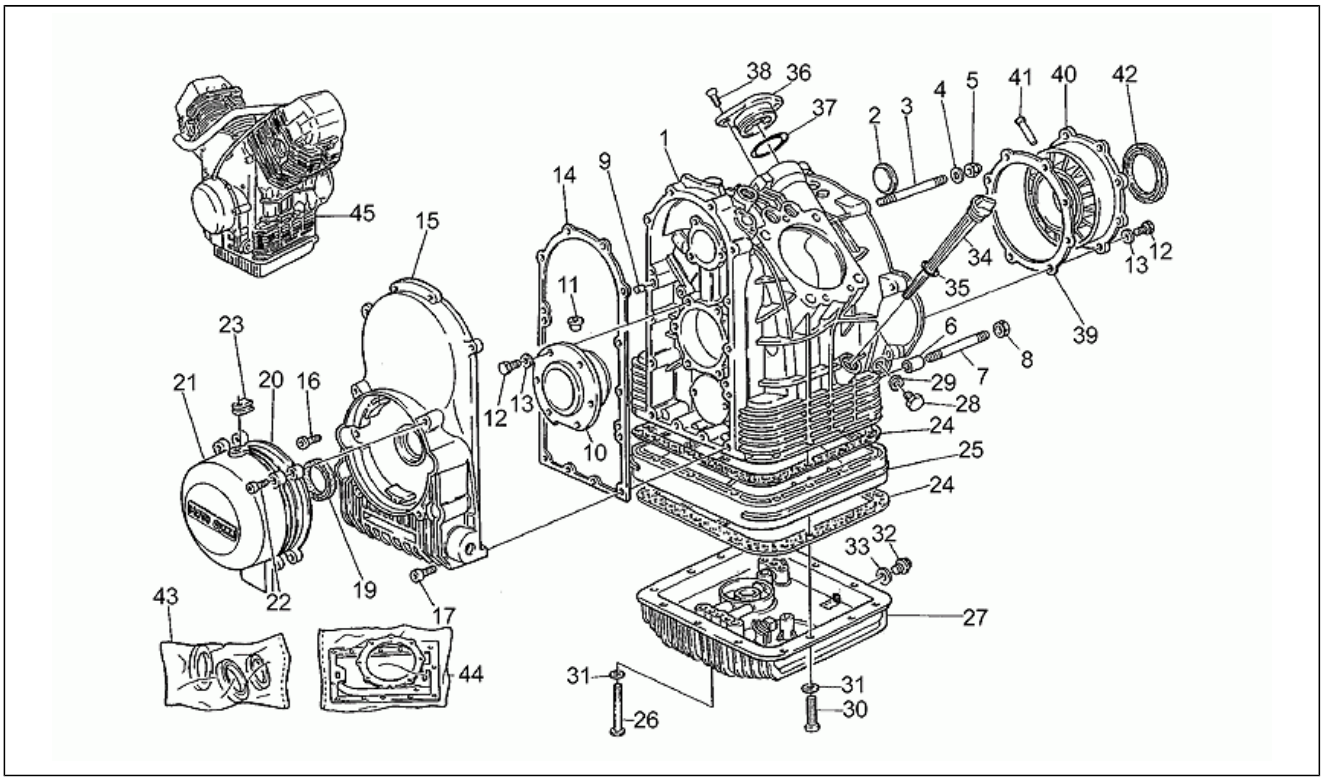

Pos.	Code	Description	Q.ty	Variants
1	GU29000735	Crankcase	1	**Color:**Blank[gr]
1	GU30000770	Crankcase, grey	1	**Color:**Grey[gg]
2	GU12003900	Disc	1	
3	GU96508066	Stud bolt M8X66	4	
4	GU95004208	Washer	6	
5	GU92781081	Nut	2	
6	GU12018900	Coupling bush	2	
7	GU96508075	Stud bolt M8x75	2	
8	GU92602208	Nut M8X1,25	4	
9	GU95512081	Pin	2	
10	GU14011900	Complete flange	1	**Technical Specifications:**Tolerance standard[std]
10	GU14011901	Flange min.0,2 mm	1	
11	GU12012200	Pin	1	
12	GU98054425	Screw M8X25	14	
13	GU61270300	Spring washer 8x15x0,3	14	
14	GU12001200	Cover gasket	1	
15	GU29001453	Timing system cover, blank	1	**Color:**Blank[gr]
15	GU30001461	Timing system cover	1	**Color:**Grey[gg]
16	GU98622325	Hex socket screw M6X25	8	
17	GU98620335	Screw M6X35	6	
19	GU90402840	Gasket ring 28x38x7	1	
20	GU18001150	Flange	1	
21	GU18001650	Cover	1	
22	GU98310630	Screw	4	
23	GU19007700	Rubber spacer	1	
24	GU14003600	Sump gasket	2	
25	GU14003240	Motor oil flange	1	**Color:**Blank[gr]
25	GU30003260	Motor oil flange	1	**Color:**Grey[gg]

Assembly	ENGINE
Code	34.25
Description	Crankcase
Revision	1

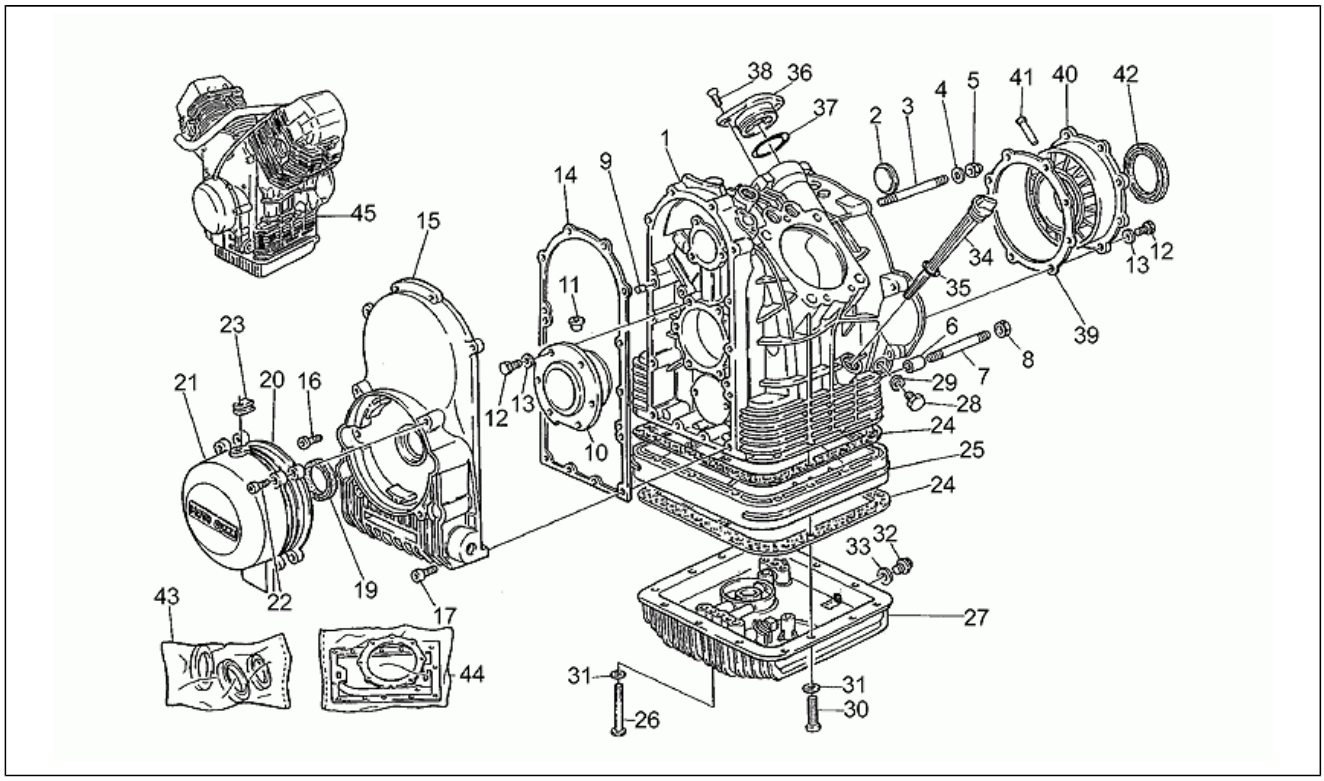

Pos.	Code	Description	Q.ty	Variants
26	GU98052390	Screw	4	
27	GU14003501	Engine oil sump, blank	1	**Color:**Blank[gr]
27	GU30003560	Oil sump grey	1	**Color:**Grey[gg]
28	GU30003770	Oil unload plug	1	
29	GU10528900	Gasket	1	
30	GU98620360	Screw	14	**Technical Specifications:**First series[1A]
31	GU95004206	Washer 6,15x11x0,8	18	
32	GU12003702	Oil unload plug	1	
33	GU95100709	Gasket 20,1x28x2	1	
34	GU30004910	Oil plug	1	
35	GU90706178	O-ring 17,86X2,62	1	
36	GU29018361	Cover	1	
37	GU90706313	O-ring	1	
38	GU98250820	Screw	2	
39	GU12011800	Gasket	1	
40	GU12011400	Complete flange	1	**Technical Specifications:**Tolerance standard[std]
40	GU12011401	Flange min.0,2 mm	1	**Technical Specifications:**Tolerance min. 0,2mm[MM5]
40	GU12011402	Flange min.0,4 mm	1	**Technical Specifications:**Tolerance min. 0,4mm[MM6]
40	GU12011403	Flange min.0,6 mm	1	**Technical Specifications:**Tolerance min. 0,6mm[MM4]
41	GU12011700	Pin	1	
42	GU90405367	Gasket ring	1	
43	GU17999550	Engine oil seal kit	1	
44	GU29999000	Engine set gasket	1	
45	GU30991030	Engine w/o gearbox	1	**Color:**Blank[gr]
45	GU30991031	Engine w/o gearbox	1	**Color:**Grey[gg]

Assembly	ENGINE
Code	34.27
Description	Throttle body
Revision	1

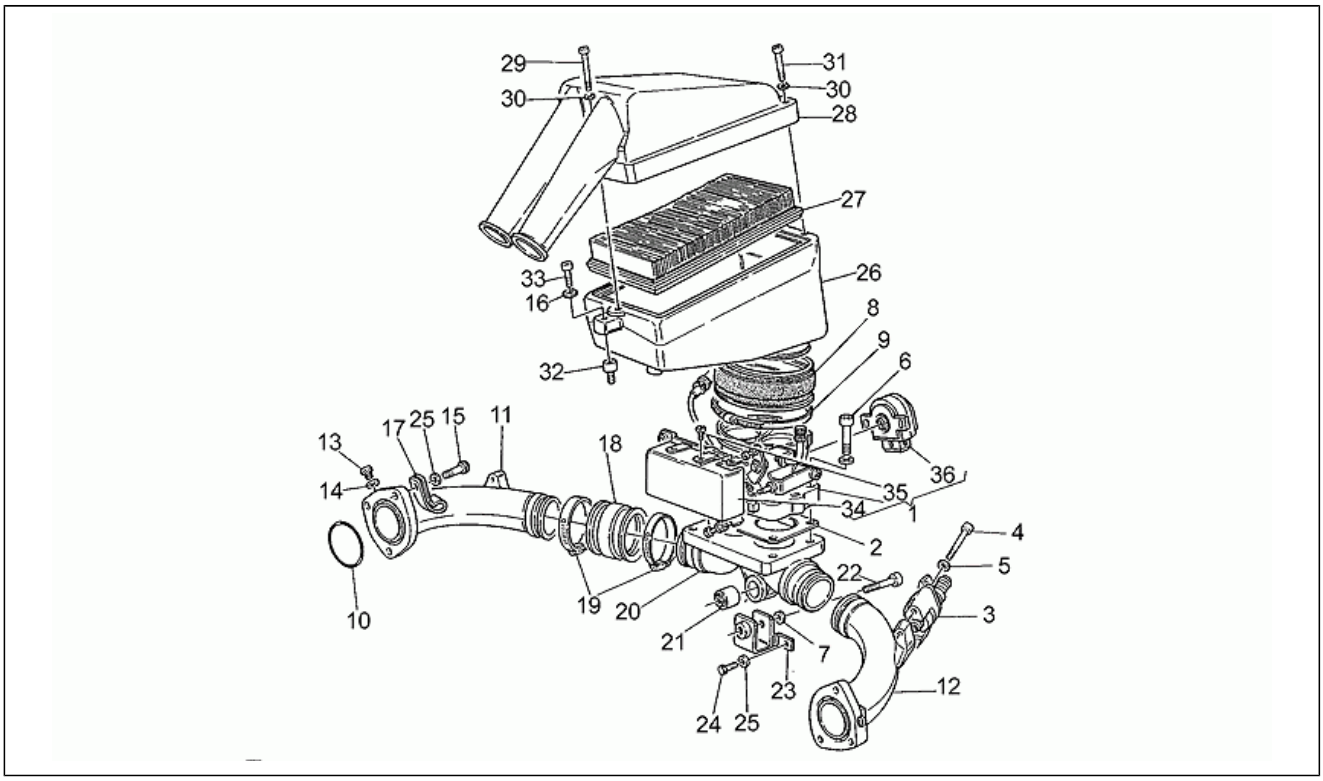

Pos.	Code	Description	Q.ty	Variants
1	GU30112630	Throttle body	1	
2	GU30113930	Gasket	1	
3	GU30115730	Injector	2	
4	GU98610245	Screw	4	
5	GU95129100	Spring washer 5,3X10X0,5	4	
6	GU98622430	Screw M8X30	4	
7	GU14615901	Washer 8,4X13X0,8	5	
8	GU30114430	Hose	1	
9	GU93305093	Hose clamp	1	
10	GU90706409	O-ring	2	
11	GU30115030	RH intake manifold	1	**Color:**Blank[gr]
11	GU30115032	RH intake manifold	1	**Color:**Grey[gg]
12	GU30115031	LH intake manifold	1	**Color:**Blank[gr]
12	GU30115033	LH intake manifold	1	**Color:**Grey[gg]
13	GU98316010	Screw	2	
14	GU95100116	Washer 6,25x10x1,5	2	
15	GU98622325	Hex socket screw M6X25	6	
16	GU95004206	Washer 6,15x11x0,8	1	
17	GU12006500	Hose clamp	2	
18	GU30114330	Hose	2	
19	GU12548401	Clamp	4	
20	GU30116930	Support	1	**Color:**Blank[gr]
20	GU30116931	Support	1	**Color:**Grey[gg]
21	GU93202208	Silent-block	1	
22	GU98622435	Screw	1	
23	GU30425330	Support	1	
24	GU98054316	Hex screw M6X16	2	
25	GU14217901	Washer 6,4x10x0,7	2	

Assembly	ENGINE
Code	34.27
Description	Throttle body
Revision	1

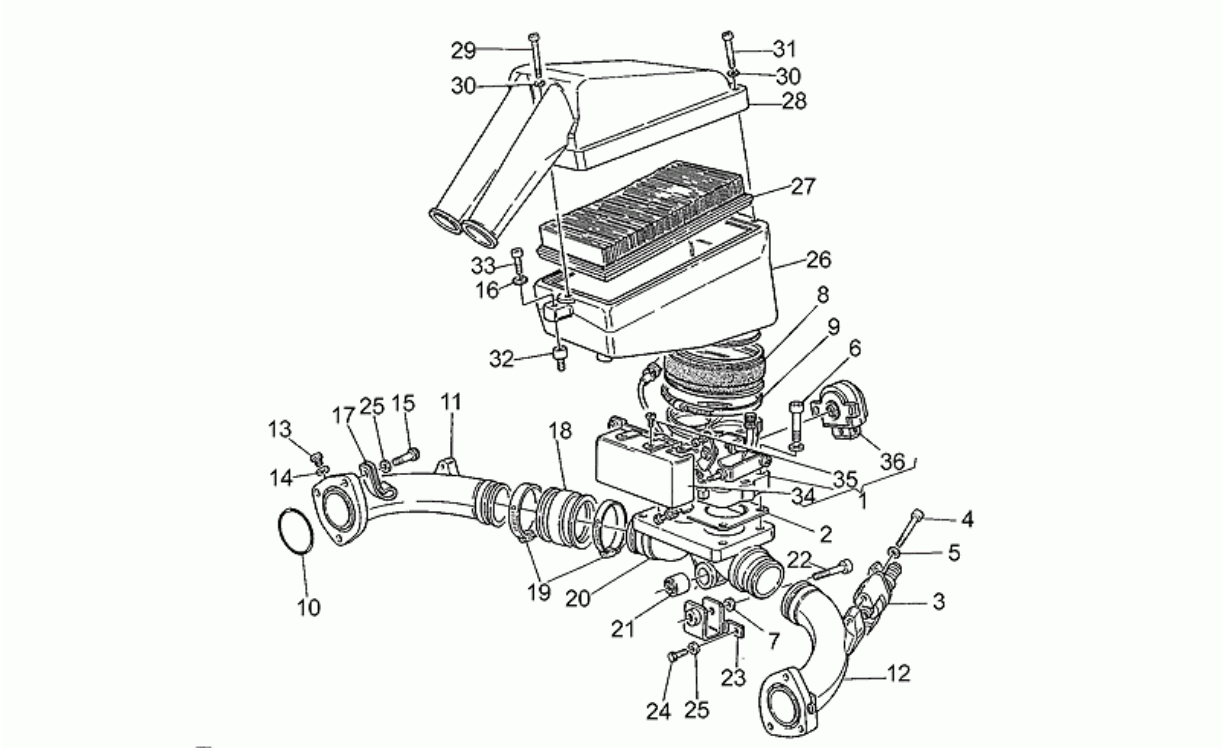

Pos.	Code	Description	Q.ty	Variants
26	GU30113730	Filter housing base	1	
27	GU30113600	Air filter	1	
28	GU30113430	Filter housing cover	1	
29	GU98620260	Screw	1	
30	GU95004205	Washer	3	
31	GU98620235	Screw	2	
32	GU93222020	Silent-block	1	
33	GU98622320	Screw	1	
34	GU30112930	Cover	1	
35	GU98200408	Screw	2	
36	GU30530553	Throttle body sensor	1	**Technical Specifications:**PF 10[PF]

Assembly	ENGINE
Code	34.28
Description	Timing system
Revision	1

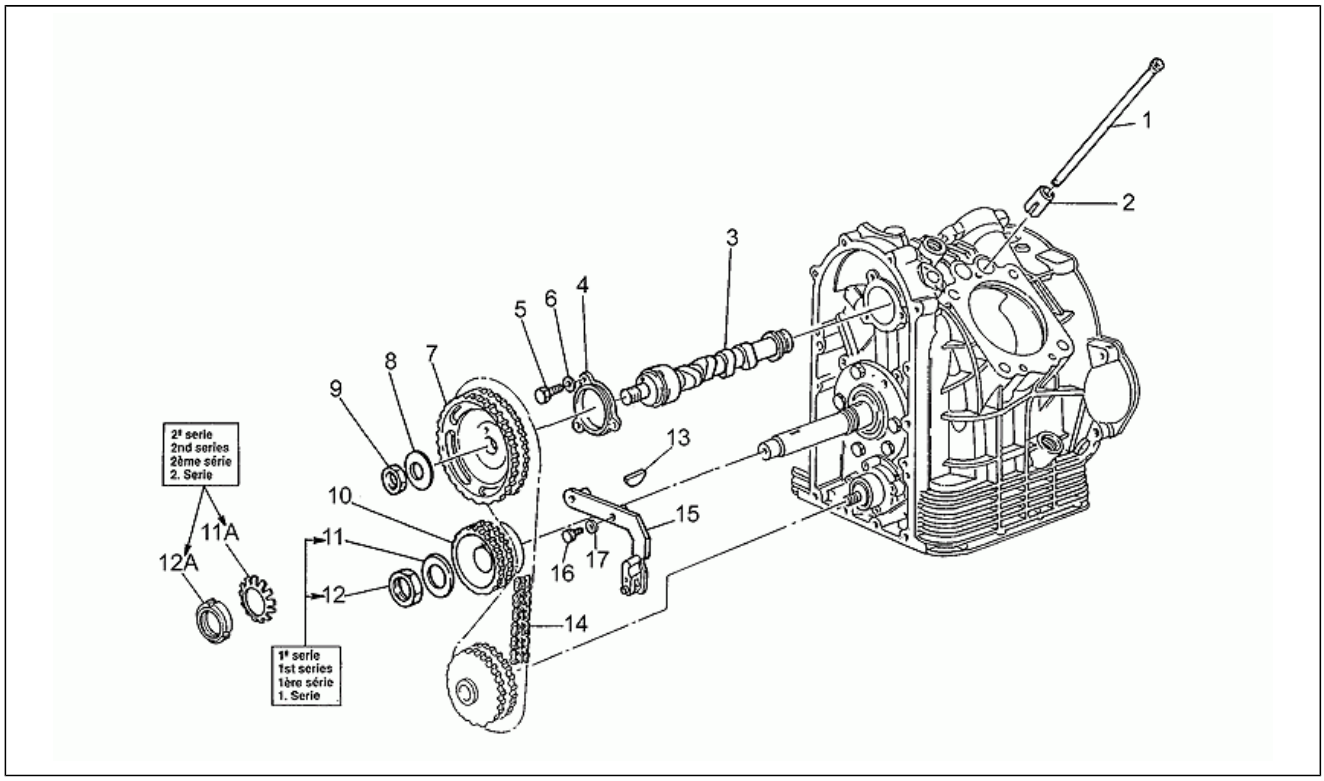

Pos.	Code	Description	Q.ty	Variants
1	GU37045006	Rocker arm rod	4	
2	GU17045860	Tappet	4	
3	GU29053350	Camshaft	1	
4	GU12054000	Flange	1	
5	GU98054320	Hex screw M6X20	3	
6	GU95120065	Washer 6,5x11x2	3	
7	GU29054460	Timing system gear	1	
8	GU14433400	Spring washer 19x34x1,5	1	
9	GU92602518	Nut M18X1,5	1	
10	GU14072001	Pinion	1	
11	GU95028025	Safety washer	1	**Technical Specifications:**First series[1A]
11	GU95100837	Washer 25,5x35x2	1	**Technical Specifications:**Second series[2A]
12	GU92602525	Nut M25	1	**Technical Specifications:**Second series[2A]
12	GU93601026	Ring nut	1	**Technical Specifications:**First series[1A]
13	GU91702355	Transmission key	1	
14	GU28058060	Chain	1	
15	GU30057810	Chain tensioner	1	
16	GU98052435	Hex screw M8X35	2	
17	GU61270300	Spring washer 8x15x0,3	2	

Assembly	ENGINE
Code	34.29
Description	Clutch
Revision	1

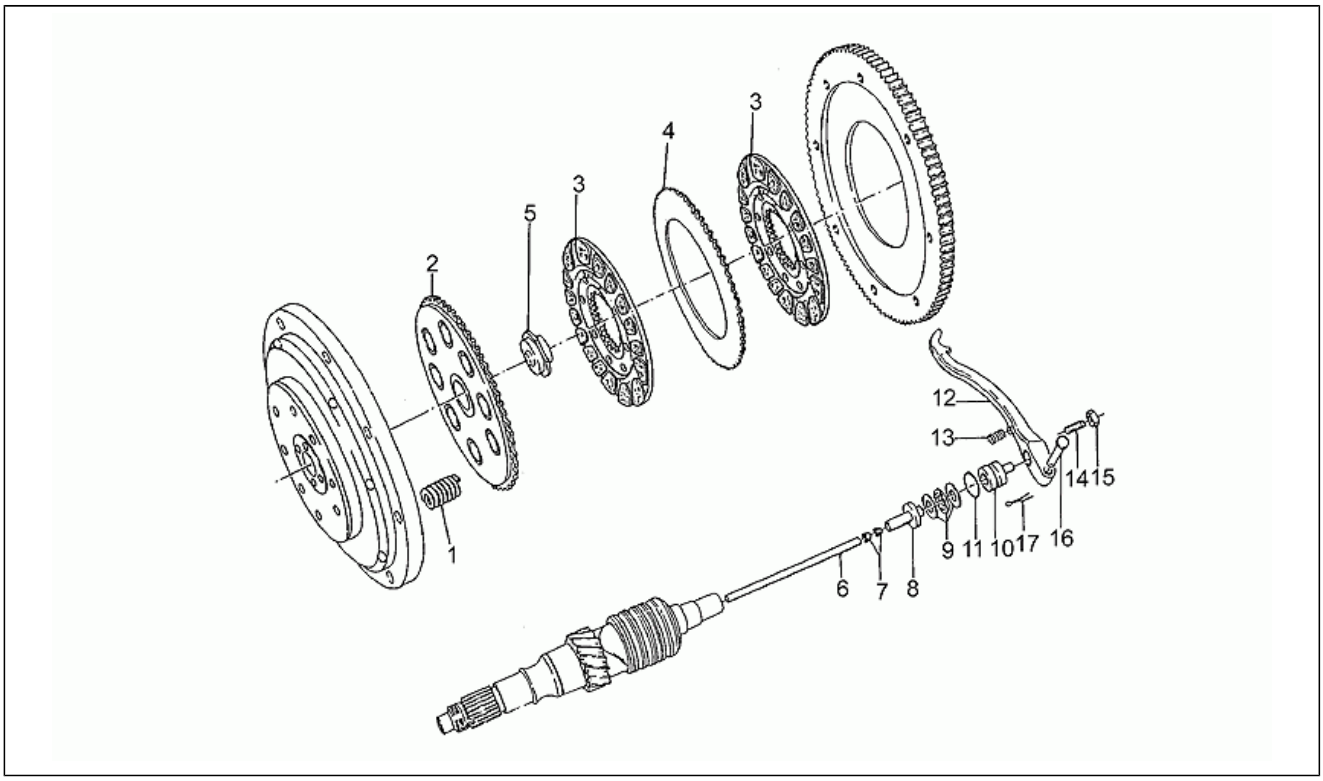

Pos.	Code	Description	Q.ty	Variants
1	GU13084100	Clutch spring	8	
2	GU12082901	Disc	1	
3	GU29084450	Clutch plate complete	2	
4	GU12082300	Intermediate plate	1	
5	GU12082800	Cup	1	
6	GU14085700	Rod	1	
7	GU14085900	Bush	2	
8	GU14086000	Inner body	1	
9	GU12087001	Thrust bearing	1	
10	GU14086100	Outer body	1	
11	GU90706170	O-ring 17,13x2,62	1	
12	GU14090202	Clutch relese shaft	1	
13	GU94321105	Lever return spring	1	
14	GU14090400	Adjuster screw	1	
15	GU92602508	Nut M8X1	1	
16	GU95780271	Pin 7x39	1	
17	GU95500222	Split pin	1	

Assembly	ENGINE
Code	34.30
Description	Generator
Revision	1

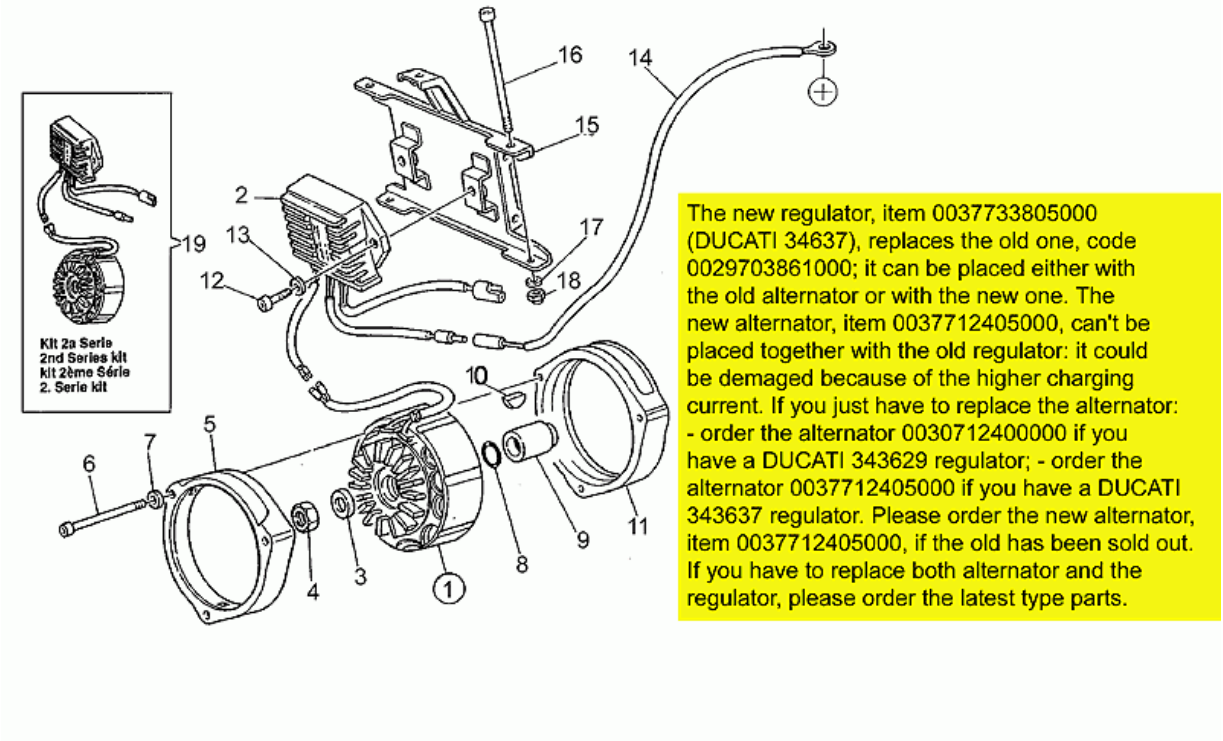

Pos.	Code	Description	Q.ty	Variants
1	GU37712405	Generator	1	**Technical Specifications:**Second series[2A]
2	GU37703805	Voltage regulator	1	
3	GU30714200	Washer	1	**Technical Specifications:**First series[1A]
3	GU30714201	Washer 16,25x24,5x5	1	**Technical Specifications:**Second series[2A]
4	GU92602512	Low nut M12x1,25	1	**Technical Specifications:**First series[1A]
4	GU92603516	Nut M16X1,5	1	**Technical Specifications:**Second series[2A]
5	GU29711460	Front calotte	1	
6	GU98620265	Screw	3	
7	GU29217960	Washer 5,9X3X0,8	3	
8	GU90706178	O-ring 17,86X2,62	1	
9	GU37712306	Spacer	1	
10	GU91600450	Transmission key	1	
11	GU29711960	Rear cap	1	
12	GU98622314	Screw	2	
13	GU61013800	Special washer	2	
14	GU29726461	Battery leads	1	
15	GU30407430	Support plate	1	
16	GU98610399	Screw	2	
17	GU95004206	Washer 6,15x11x0,8	4	
18	GU92630206	Nut M6x1	2	
19	GU37712405001	Generator - Regulator	1	

Assembly	ENGINE
Code	34.32
Description	Starter motor
Revision	1

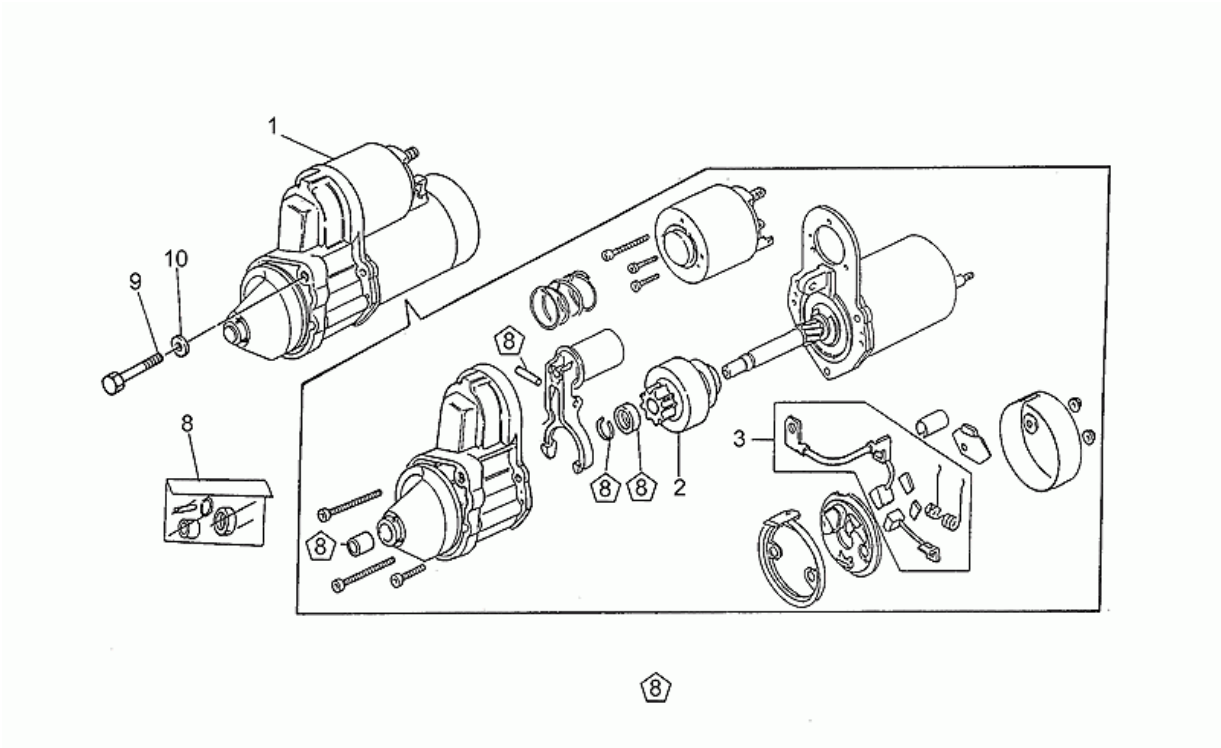

Pos.	Code	Description	Q.ty	Variants
1	GU30730711	Starter motor Valeo	1	
2	GU30530510	Pinion assy	1	
3	GU30530511	Brush revision set	1	
8	GU30530512	Starter motor revision kit	1	
9	GU98052475	Hex screw M8X75	2	
10	GU95004208	Washer	2	

Assembly	ENGINE
Code	34.34
Description	Oil pump
Revision	1

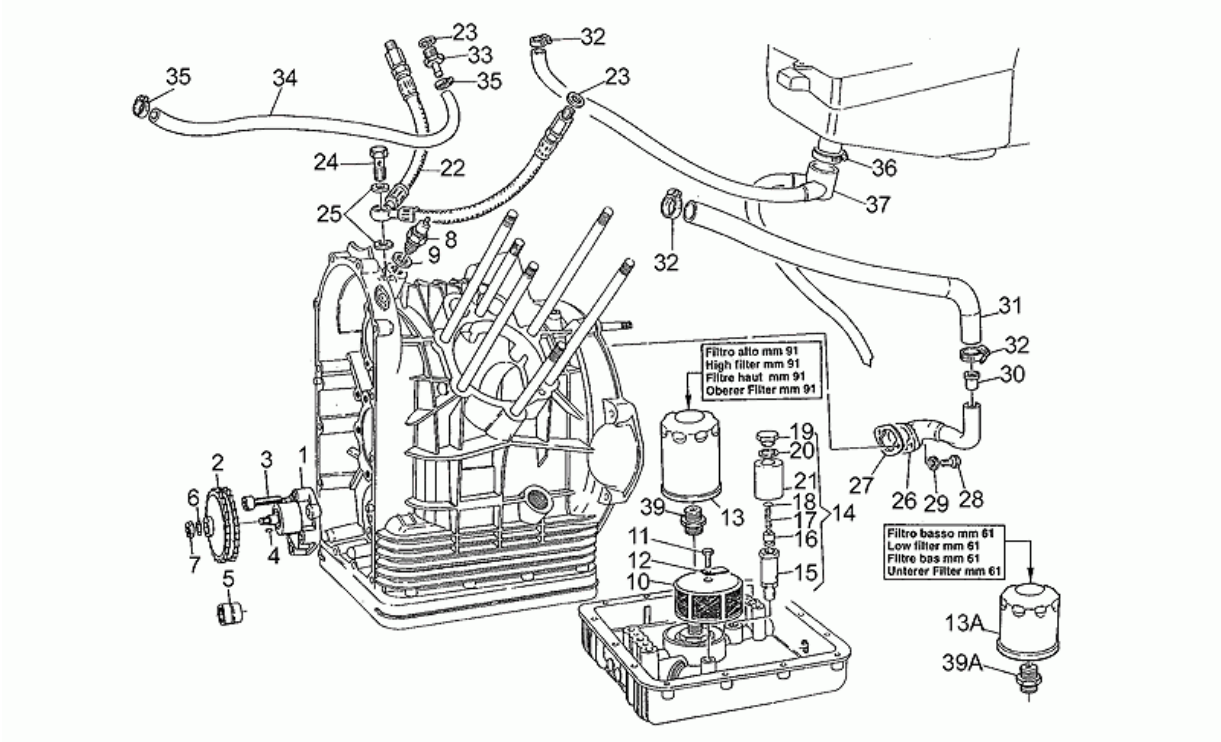

Pos.	Code	Description	Q.ty	Variants
1	GU30146400	Oil pump	1	
2	GU30147700	Oil pump gear	1	
3	GU98622430	Screw M8X30	4	
4	GU13148300	Transmission key	1	
5	GU92252210	Roller bearing 10x22x20	1	
6	GU95120085	Spring washer	1	
7	GU92602308	Nut	1	
8	GU17768750	Pressure sensor	1	
9	GU12006400	Gasket 12,25	1	
10	GU14152200	Oil filter	1	
11	GU98054316	Hex screw M6X16	1	
12	GU95187006	Plate	1	
13	GU14153000	Oil filter 61 mm	1	
13	GU30153000	Oil filter	1	
14	GU03158200	Oil valve cpl.	1	
15	GU10158701	Valve body	1	
16	GU12150900	Piston	1	
17	GU94321072	Valve spring	1	
18	GU12150700	Bottom	1	
19	GU12159000	Plug	1	
20	GU95100523	Washer 14,5X20X1	2	
21	GU14158800	Cup	1	
22	GU01153600	Pipe	1	
23	GU25656102	Gasket	4	
24	GU95990037	Screw	1	
25	GU12154200	Gasket 8,25x15x1	2	
26	GU01007200	Breather pipe	1	
27	GU12007600	Gasket	1	

Assembly	ENGINE
Code	34.34
Description	Oil pump
Revision	1

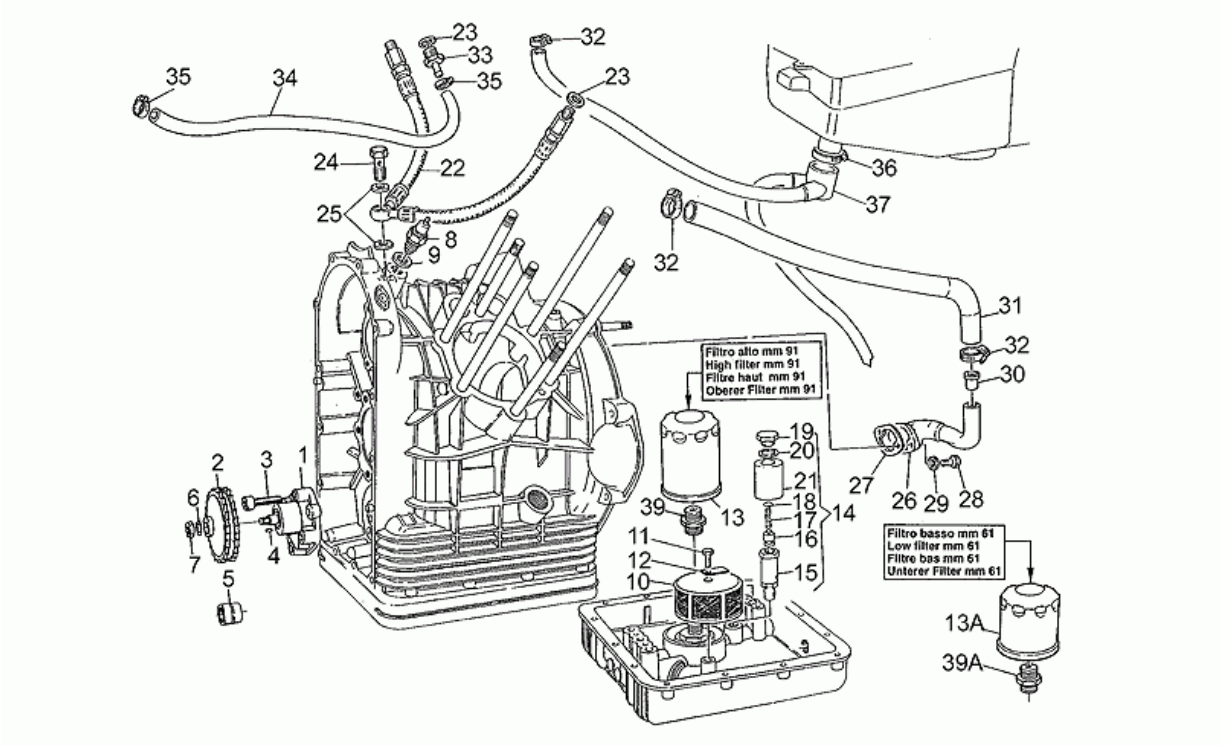

Pos.	Code	Description	Q.ty	Variants
28	GU98054320	Hex screw M6X20	2	
29	GU95120065	Washer 6,5x11x2	2	
30	GU28150560	Oil breather valve	1	
31	GU30157430	Pipe	1	
32	GU12157800	Hose clamp	3	
33	GU28153960	Union	2	
34	GU00823942070	Pipe	1	
35	GU93305017	Hose clamp	4	
36	GU28157950	Hose clip 12,5x8	1	
37	GU28157050	Pipe	1	
39	GU14003800	Oil filter union 61 mm	1	
39	GU30003800	Oil filter union	1	

Assembly	ENGINE
Code	34.35
Description	Transmission cage
Revision	1

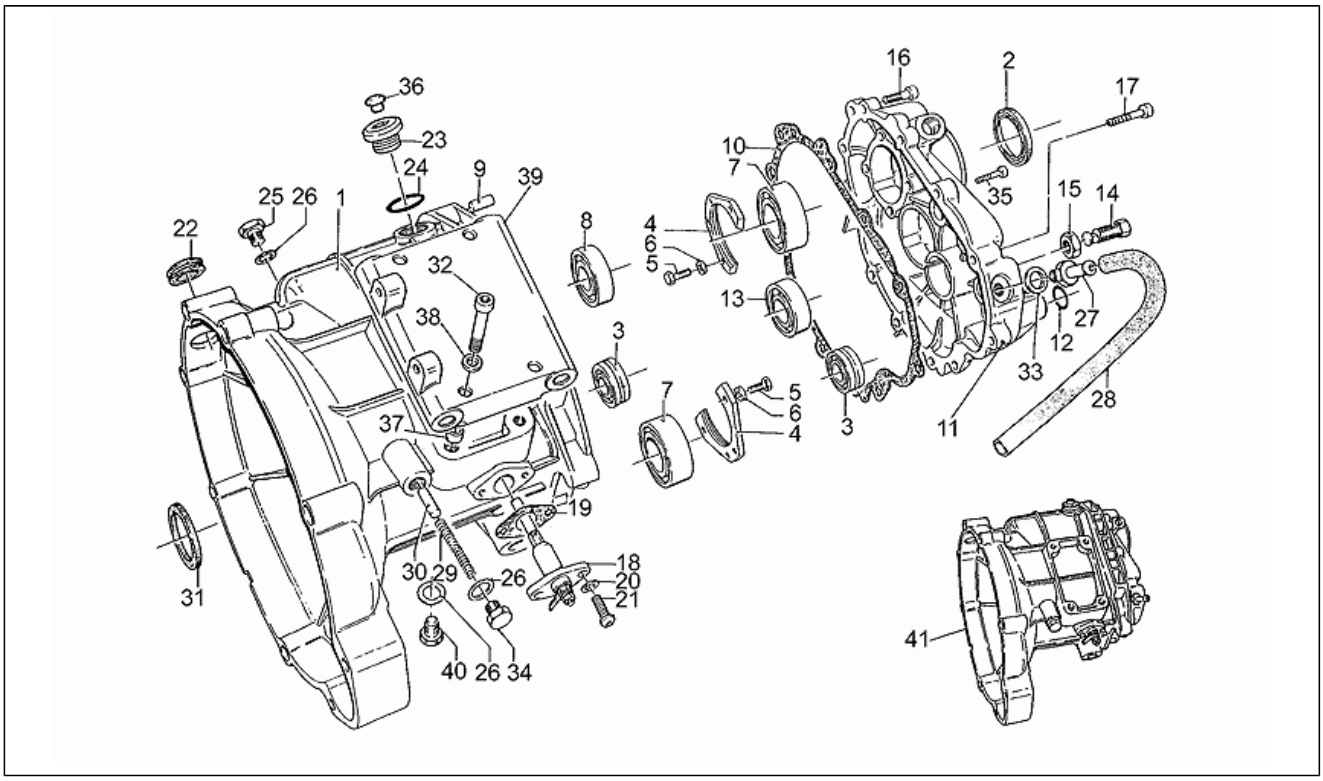

Pos.	Code	Description	Q.ty	Variants
1	GU30200200	Transmission cage	1	**Color:**Blank[gr]
1	GU30200231	Transmission cage	1	**Color:**Grey[gg]
2	GU90403547	Gasket ring 35x47x7	1	
3	GU92256218	Roller bearing 17x35x15	1	
4	GU14213803	Plate	2	
5	GU98622316	Hex socket screw M6X16	6	
6	GU14217901	Washer 6,4x10x0,7	6	
7	GU92218424	Ball bearing AF/AS 25x52	2	
8	GU92234717	Roller bearing AS 17x47x14	1	
9	GU95512081	Pin	2	
10	GU14201110	Gasket	1	
11	GU18200802	Box cover, blank	1	**Color:**Blank[gr]
11	GU30200860	Box cover	1	**Color:**Grey[gg]
12	GU90706140	O-ring 13,95x2,92	1	
13	GU92201417	Ball bearing AP 17x47x14	1	
14	GU14237800	Screw	1	
15	GU92602512	Low nut M12x1,25	1	
16	GU98622325	Hex socket screw M6X25	9	
17	GU98620335	Screw M6X35	1	
18	GU12207200	Neutral indicator switch	1	
19	GU12207700	Gasket	1	
20	GU14217901	Washer 6,4x10x0,7	2	
21	GU98230615	Screw	2	
22	GU93180220	Plug	1	
23	GU12022600	Oil plug	1	
24	GU90706203	O-ring 20,24X2,62	1	
25	GU95980214	Oil level plug	1	
26	GU10528900	Gasket	3	

Assembly	ENGINE
Code	34.35
Description	Transmission cage
Revision	1

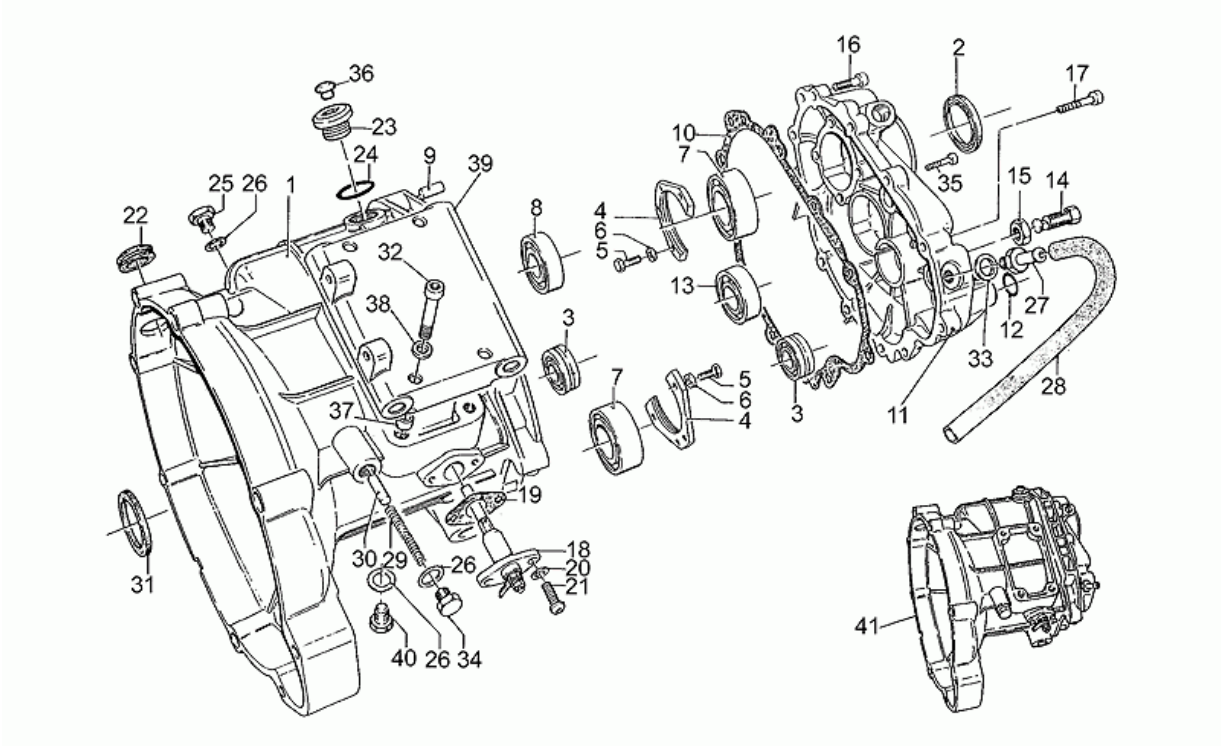

Pos.	Code	Description	Q.ty	Variants
27	GU14204955	Oil breather valve	1	
28	GU00823942070	Pipe	1	
29	GU94321067	Lever return spring	1	
30	GU55234700	Pawl	1	
31	GU90403548	Gasket ring 35x47x7/6,5	1	
32	GU98620440	Screw M8X40	4	
33	GU12154200	Gasket 8,25x15x1	1	
34	GU95980610	Plug	1	
35	GU98822325	Screw	1	
36	GU93180245	Plug	1	
37	GU91181006	Bush	2	
38	GU95004208	Washer	4	
39	GU30425030	Gearbox housing support	1	**Color:**Blank[gr]
39	GU30425031	Support plate	1	**Color:**Grey[gg]
40	GU31003766	Oil unload plug M10X1	1	
41	GU30991530	Gear box assy	1	**Color:**Blank[gr]
41	GU30991531	Gear box assy	1	**Color:**Grey[gg]

Assembly	ENGINE
Code	34.36
Description	Heads
Revision	1

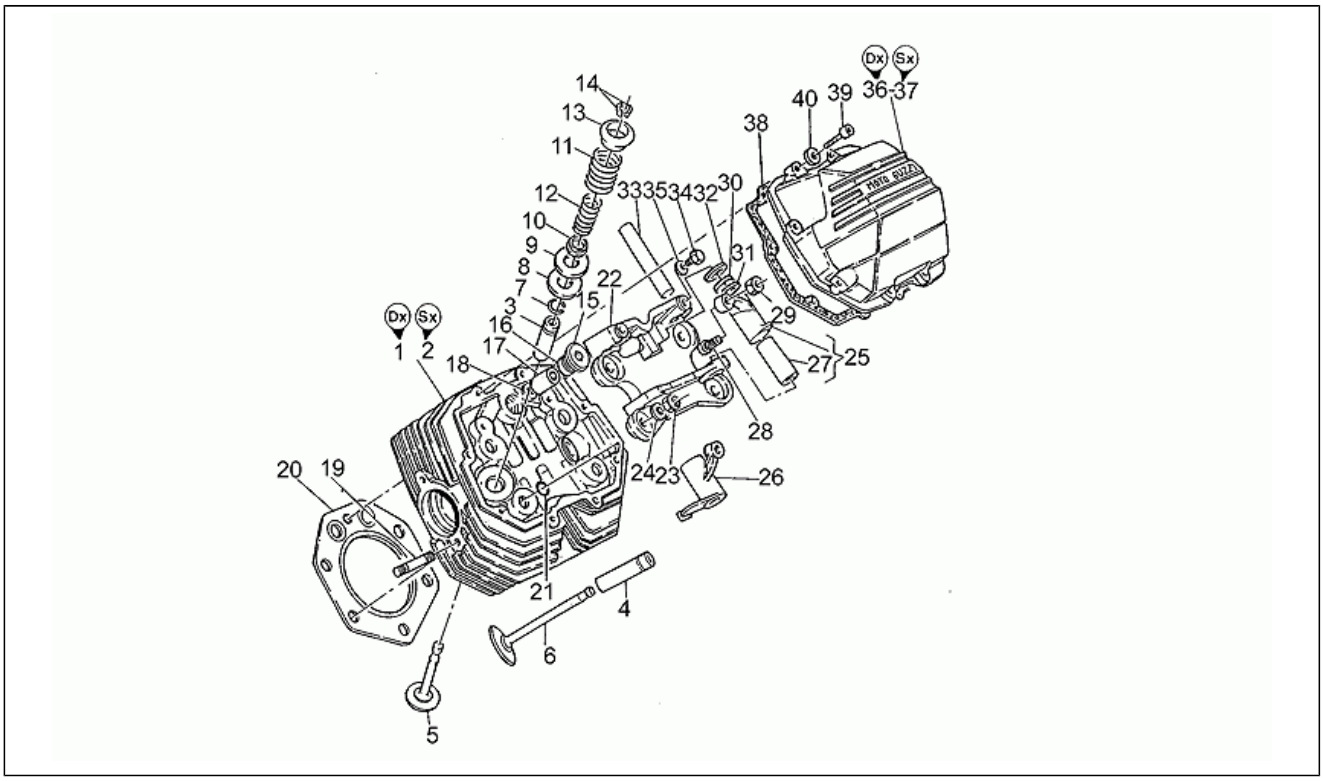

Pos.	Code	Description	Q.ty	Variants
1	GU30022110	RH head	1	
1	GU30022160	RH head assy w/h valve grey	1	**Color:**Grey[gg]
2	GU30022210	LH head	1	
2	GU30022260	LH head assy without valve grey	1	**Color:**Grey[gg]
3	GU13036801	Exhaust valve guide	2	
4	GU14036860	Intake valve guide	2	
5	GU30036110	Exhaust valve	2	
6	GU30036010	Intake valve	2	
7	GU90353016	Snap ring	4	
8	GU13037200	Washer 14,2x31x1	4	
9	GU14037300	Washer 14,2x31x0,3	10	
10	GU13037000	Lower cup	4	
11	GU13037400	Outer spring	4	
12	GU13037600	Inner spring	4	
13	GU14038000	Upper cup	4	
14	GU12038100	Valve half-cone	8	
15	GU12022600	Oil plug	2	
16	GU90706203	O-ring 20,24X2,62	2	
17	GU13021900	Column nut	2	
18	GU95129180	Washer 10,5X18X0,8	2	
19	GU96508042	Stud bolt	4	
20	GU14022065	Gasket	2	
21	GU90706094	O-ring 9x2	8	
22	GU14034865	Rocker arm support	2	
23	GU92603010	Nut M10X1,5	10	
24	GU14018400	Washer 10,5X21X1	10	
25	GU14030201	RH rocker arm assy	2	
26	GU14030401	LH rocker arm assy	2	

Assembly	ENGINE
Code	34.36
Description	Heads
Revision	1

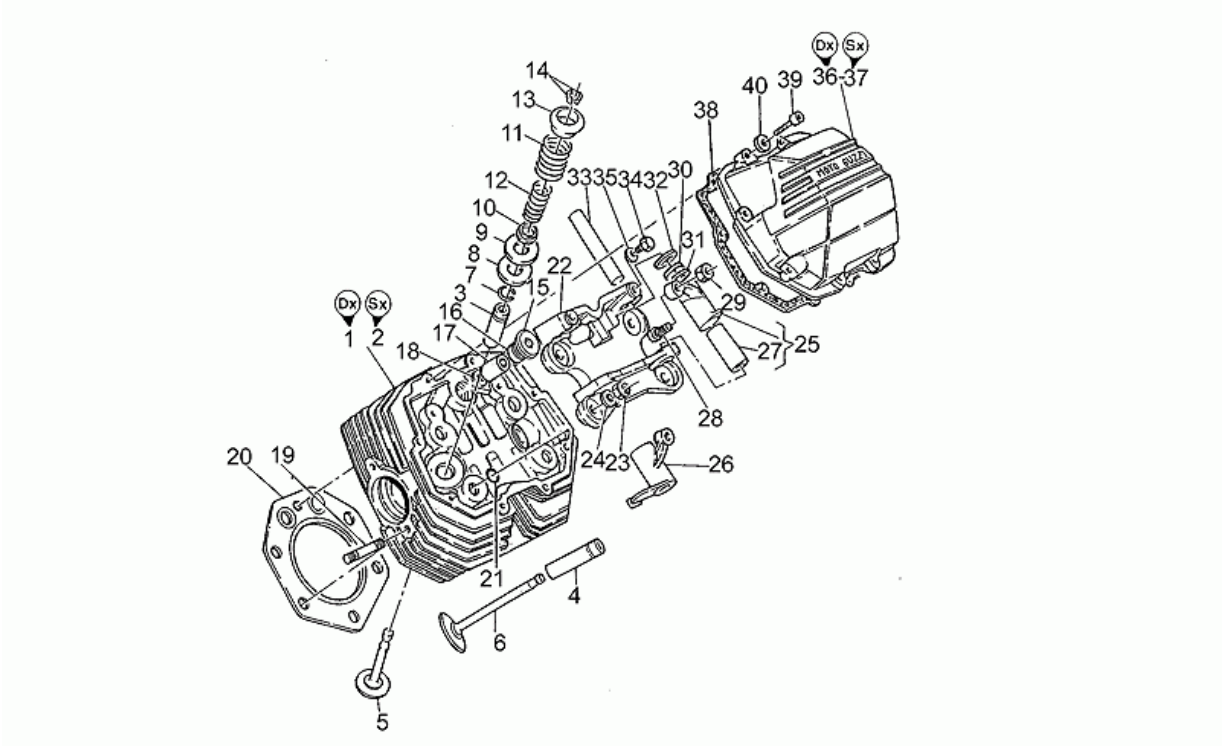

Pos.	Code	Description	Q.ty	Variants
27	GU91111511	Bush 15x18x43	4	
28	GU17034050	Adjuster screw	4	
29	GU10034100	Nut	4	
30	GU94322215	Spring	4	
31	GU90118152	Washer 15,2x26x1	8	
32	GU10032700	Washer 15,2x26x0,5	4	
33	GU12031800	Rocker shaft	4	
34	GU98054316	Hex screw M6X16	4	
35	GU95120065	Washer 6,5x11x2	4	
36	GU14023560	Valve cover, blank	1	**Color:**Blank[gr]
36	GU37023505	Valve cover, grey	1	**Color:**Grey[gg]
37	GU01023600	LH valve cover	1	**Color:**Grey[gg]
37	GU30023630	LH valve cover	1	**Color:**Blank[gr]
38	GU14023760	Cover gasket	2	
39	GU98622325	Hex socket screw M6X25	16	
40	GU95004206	Washer 6,15x11x0,8	16	